Paper accepted for presentation at PPT 2001
2001 IEEE Porto Power Tech Conference
10th –13th September, Porto, Portugal

Comparison of Approaches to Identify Topology Errors in the Scope of State Estimation Studies

Jorge Correia Pereira João Tomé Saraiva Vladimiro Miranda
Antonio Simões Costa Elizete Maria Lourenço Kevin A. Clements

Abstract – In this paper we describe two approaches developed by two research teams to address the topology identification problem in the scope of state estimation. Both approaches aim at enlarging the traditional concept of strict state estimation, assuming that the network topology is pre-determined and is fixed. In fact, we are generalizing state estimation, enlarging its domain and aiming at obtaining topology information from a state estimation run. Apart from the description of those two techniques, the paper includes a set of tests performed over the same test system in order to illustrate the interest of the approaches and to evaluate their performances.

Index Terms—**Topology Error Identification, Power System State Estimation, Power System Real Time Modeling.**

I. Introduction

State estimation procedures became one of the most frequently used power system applications in control centers of composite generation/transmission systems. Regarding distribution systems, the trend to increase the automation level of distribution networks, the reregulation of the industry decoupling operation from commercialization of electricity, the need to monitor more closely and to price the use of networks and the pressures to increase quality of service lead to the installation of SCADA systems, in a first moment, and DMS, Distribution Management Systems, afterwards. Once again, and although conveniently adapted to the data available in distribution networks, state estimation is turning into one of the crucial applications in DMS environments.

State Estimation can be understood in a broader sense as including a set of applications globally aimed at identifying the state of the system given that, at a certain moment, there are a number of telemetered or manually entered values. In this broader sense, State Estimation can include:

- Topology Processor, which processes switching device status to obtain a simplified one-line diagram of the system;
- Component Model and Measurement Allocation, whose purposes are to identify the mathematical model of the components, to get the required data from the System Database and to allocate the available measurements to the devices preserved in the simplified model;
- Observability Analysis, which analyzes the available measurements to check if they carry enough information to estimate the state of the system. It can also provide information about places where new measurement devices should be located;
- Strict State Estimation Procedure, which traditionally assumes that the topology of the network is fixed, and aims at identifying the values of the state variables that, according to some criterion, more adequately explain the measurements. This study can be more properly addressed as the redundancy level increases in order to deal with measurement errors, absence of measurements in certain areas or time-skew problems;
- Bad Data Analysis, which evaluates the effects of large errors on measurements in order to detect and identify them.

This traditional way of structuring a state estimation application relies on the basic assumption that the topology of the system is known beyond any doubt. However, in most of the real world situations, the state of some switching devices is unknown or, for some reason, the current value in the database is under suspicion. In some cases, some checks can be done to "correct" the current state of such devices, specially if a large number of analogue measurements are available around that component. In other cases that is quite difficult as, for instance, in distribution networks, since reconfiguration actions are very frequent and the number of telemetered measurements is generally very reduced.

The above reasoning leads to the conclusion that the traditional block-organized Global State Estimation procedure as described above is very frequently of limited use. In fact, real time state estimation applications should be flexible enough so that the topology should not be required as a fixed input. On the contrary, the application should have the flexibility to admit that, for some switching devices, the current statuses are unknown or under suspicion. In this way, the Topology Processor and the Strict State Estimation Procedure would intersect themselves leading to an holistic approach to State Estimation. In this sense, one would like to consider the statuses of some switching devices as new state variables estimated along the State Estimation procedure together with other common state variables.

The need to develop new State Estimation applications in this holistic sense was recognized by several research teams. As examples, in [1] the authors use a Least Absolute Value State Estimation algorithm to compute the values of the residuals assuming the state of the unknown or under suspicion switching devices. The normalized residuals lead to the identification of suspect devices thus requiring new runs of the Estimator. In [2], a generalized state estimation algorithm is described which explicitly includes switch modeling. These authors consider P/Q state variables for

J. Pereira is with FEP – Fac. Economia da Universidade do Porto and INESC Porto – Instituto de Engenharia de Sistemas e Computadores do Porto, Praça da Republica, 93, 4050-497 Porto, Portugal (e-mail: jpereira@linescporto.pt).

J. T. Saraiva is with FEUP – Fac. Engenharia da Universidade do Porto and INESC Porto, (e-mail: jsaraiva@fe.up.pt).

V. Miranda is with FEUP and INESC Porto, (e-mail: vmiranda@inescporto.pt).

A. Simões Costa is with Univ. Federal de Santa Catarina, Dept. de Eng. Eléctrica 66040-900 Florianopolis, Brazil (e-mail: simoes@labspot.ufsc.br).

E. Lourenço is with Univ. Federal de Santa Catarina, Dept. de Eng. Eléctrica (e-mail: elizete@labspot.ufsc.br).

K. A. Clements is with Worcester Polytechnic Institute, Worcester, MA 01609, USA (e-mail: clements@ece.wpi.edu).

those switches, a zero-flow pseudo-measurement for an initially considered opened switch, or a zero-voltage drop pseudo-measurement for an initially closed switch. If the initial status is unknown, there is no pseudo-measurement assigned to that switch. In [5] the authors consider that a branch can be initially assigned a closed or opened situation or can be simply in an uncertain status. These situations are modeled by considering variables that can take values 0.0, 1.0 or 0.5 for each of these three situations. This modeling leads to a non-differentiable, non-linear, mixed integer programming problem. To solve this problem, the authors devised an algorithm that solves a sequence of linear programming problems by relaxing, in each iteration, the integrality constraints.

When speaking about topology identification we are also addressing island identification. An island corresponds to a set of equipments that are physically connected. When going through all the components to identify islands, one may face problems if there are two sets of equipments that can lead to two different islands or that can be merged into a single one depending on the status of some switching devices whose state is unknown or is under suspicion. In [2] the authors present the concept of Extended Island corresponding to a larger set of equipments that may be physically connected. They will actually correspond to an island if those switching devices are set to a close status or they will correspond to different islands if the status of those devices is open. This means that new State Estimation procedures should also be flexible enough to consider the possibility of system splitting, that is, the possibility of such an extended island lead in fact to different disconnected islands.

Given these concerns and the research that was done by the two involved teams, in this paper we describe two different approaches to address the topology identification problem including the possibility of system splitting in the scope of State Estimation Models. In the next sections these two approaches will be referred as Model 1 and Model 2. In brief, Model 1 uses Normalized Lagrange Multipliers and Hypothesis Testing to deal with the unknown or under suspicion status of switching devices [6], [7]. *A priori* information is included in the state estimation problem to circumvent the problems regarding critical sets of status information and system splitting during topology error identification. In Model 2 one includes topology variables in the state vector to represent the closed/open status of those devices [8]. These are real valued variables but their binary nature is enforced by considering for each of them state equations having 0 and 1 as their only roots.

Apart from the detailed description of the two models presented in Sections II and III, the paper includes a set of comparisons running the two applications for the same test network. This is the IEEE 24 bus test system, for which some substations are detailed at the bus section level. A set of topology errors are simulated and treated by the two referred models.

II. Model 1 – Normalized Lagrange Multipliers and Bayes' Theorem

A. Restricted State Estimation

As in [2], this approach generalizes the conventional notion of state variable by considering power flows on switching branches as states, in addition to the conventional nodal voltages. The regions of the network under suspicion are modeled at the bus section level, so that the switching branches are explicitly represented. Zero injections at bus sections are treated as equality constraints to the state estimation problem, and are referred to as *structural constraints.* In addition, we define *operational constraints*, which depend on the switch status and are based either on the power flows through or the voltage drop across the switching branches [2].

As remarked in [6], the occurrence of critical sets formed by switching branch status data during topology error identification is in large extent dictated by network topology. Unlike analog data critical sets, status information critical sets cannot be eliminated by reinforcements of the measurement configuration. To circumvent the degrading effects caused by critical sets on the performance of error identification, *a priori* information regarding the state variables are used in the state estimation problem. Consider an *N*-bus power network monitored by *m* measurements. Assuming a linear *(DC)* model for the network, let *n* be the total number of (generalized) states. The state estimation problem with *a priori* information is then formulated as an optimization problem subject to the above constraints and the measurement model equation, as follows:

$$\begin{aligned} &Min && \tfrac{1}{2} r_m^T R_m^{-1} r_m + \tfrac{1}{2} (\hat{x} - \bar{x})^T P^{-1} (\hat{x} - \bar{x}) \\ &s.t. && z_m - H_m \hat{x} - r_m = 0 \\ & && H_o \hat{x} = 0 \\ & && H_s \hat{x} = 0 \end{aligned} \tag{1}$$

where z_m and r_m are the $m \times 1$ measurement vector and residual vector, respectively, $\hat{x}$ is the $n \times 1$ state estimated vector, $\bar{x}$ is the *a priori* information for the state estimated vector, R_m and P are the covariance matrices for the measurement error and *a priori* states, respectively, and H_m, H_o and H_s are the observation matrices for the measurements, operational constraints and structural constraints, respectively. Applying the Karush-Kuhn-Tucker necessary conditions to the Lagrangean function of problem (1), a linear system of equations is obtained whose unknowns are $\hat{x}$ and the Lagrange multipliers λ_m, λ_o and λ_s corresponding to each set of equality constraints in (1) [6], [7].

B. Suspect Switching Branch Selection

As shown in [6], the Lagrange multipliers, when properly normalized by the respective variances, play the same role as the normalized residuals in bad data processing. If their magnitude is large, this is an indication of inconsistencies in the mathematical model. Therefore, the above described formulation generates real valued variables as the entries of vector λ_o, which are associated with the status of each switch represented in the network model. The occurrence of topology errors can now be detected by monitoring the values in the normalized vector of λ_o, referred as λ_o^N. If the largest absolute value in λ_o^N is found to be larger than a pre-specified threshold σ, it is concluded that a topology error

has occurred. A typical value for σ is 3.0. In case the detection test points out the occurrence of topology errors, the absolute values of λ_o^N entries are used to select the switching branches which are suspect to be erroneously modeled. By applying statistical tests involving the suspect switching branches, it is possible to identify incorrect assumptions made about their status, as described in the next paragraphs.

C. Hypotheses Testing Identification

The proposed hypothesis testing for topology error identification relies on Bayes' theorem [9] to compute the *a posteriori* probability of each possible status configuration involving the various switches under suspicion [7]. This procedure avoids costly state re-estimations that would be otherwise required to identify the correct combination of switch status.

Considering that there are n_s switching branches selected as suspect, there are 2^{n_s} possible combinations for their status. We let the basic hypothesis, denoted H_o, be the combination that represents the current status of the suspect set. All other status combination are represented by the alternative hypotheses, $H_i, i = 1,...,2^{n_s} - 1$.

The purpose of hypothesis testing is to establish whether the available information (measurements and constraints) support the basic hypothesis or some other alternative hypothesis. Let $P(H_i)$ be the *a priori* probability of the hypothesis *i* and $P(H_i|z)$ be the *a posteriori* conditional probability. The relevant form of Bayes' theorem states that [10]:

$$P(H_i \mid z) = \frac{f(z \mid H_i)P(H_i)}{\sum_{j-1}^{2^{nds}} f(z \mid H_j)P(H_j)} \qquad (2)$$

where $f(z|H_i)$ is the conditional probability density function of z given that H_i holds.

If *x* and the measurement errors are assumed to be Gaussian random variables, the conditional probability density function for each alternative hypotheses *i* is Gaussian and can be expressed by [9]:

$$f(z \mid H_i) = 2\pi^{-\frac{m}{2}} \left|\Omega_i\right|^{-\frac{1}{2}} e^{\left\{-\frac{1}{2}(z-H\bar{x})^T \Omega_i^{-1} (z-H\bar{x})\right\}} \qquad (3)$$

where $\left|\Omega_i\right|$ is the determinant of the Lagrange multiplier covariance matrix. For the basic hypothesis, this matrix can be directly obtained from the Tableau algorithm solution of equation (1). It is important to remark that the calculation of $f(z \mid H_i)$ for the alternative hypotheses is based solely on the state estimation results for the basic hypothesis. That is to say that no further state estimation runs for the alternative hypotheses are required. Instead, $f(z \mid H_i)$ is obtained from $f(z \mid H_o)$ by modifying the correspondent covariance matrices [7], [10].

III. Model 2: $x^2 - x = 0$ State Equations

A. General Ideas

Frequently, several algorithms are apparently very simple in their formulations. However, when passing from academic versions to real life applications, it is usually possible to detect several problems that have to be addressed before getting a realistic usable version. This is certainly the case of State Estimation algorithms in general, and the Weighted Least Squares, in particular. Traditional State Estimation formulations express each measurement in the Z vector in terms of a function h, written on the state variables X, plus an error ε (4). These formulations use voltage magnitudes and phases as state variables and aim at estimating the most adequate set of values for state variables, X. This is accomplished by computing X that better explain a set of measurements, while minimizing the weighted sum of the squares of the differences between measured values and estimated ones (5). In this expression, R is the matrix of the variances and covariances of the errors (usually diagonal) and r represents the residuals taken as differences between measured values and estimated ones.

$$Z = h(X) + \varepsilon \qquad (4)$$

$$\min \quad r^T R^{-1} r \qquad (5)$$

If one admits that the topology of the network is fixed before running the State Estimation algorithm, the problem is fairly easy and is presented and detailed in several publications. However, the complexity arises if the topology is not completely known due to the presence of suspicious information in the Database or due to the absence of information regarding some switching devices. In this case, it can be identified a number, usually large, of combinations of positions of the switching devices that might have to be analysed in order to get some insight about the topology in operation. In our approach, we considered that each switching device under suspicion or with lack of information is related to a new state variable, that has a binary nature. In order to preserve the continuous nature of the problem, we consider that these are real valued variables, but we constrain them to relations as (6).

$$x^2 - x = 0 \qquad (6)$$

These equations are included in the State Estimation vector of functions h(x) thus enforcing that these new state variables take the values 0.0 or 1.0 in the final results. This means that, if there is enough redundancy, this State Estimation formulation gives the estimated values for voltages and phases, as well as the estimated states of switching devices under suspicion or in an unknown status.

B. Mathematical Formulation

Let us consider that the state of the switching device installed in the sending end of branch ij is under suspicion or is unknown. This situation can be accurately modelled by considering a topology variable D_{ij} that takes the value 0 when the device is opened and 1 if it is closed. This variable will now be considered a state variable and we aim at

estimating its value assuming there is enough measurement redundancy in the system.

The use of this state variable has several impacts in the traditional State Estimation Least Weighted Squares algorithm in the sense that it changes several relations usually considered in the formulation. As an example, depending on the state of that device, the active flow from node i to node j can assume any real value, including 0.0 so that expression (7) should be considered in the state function vector h(x) for a P_{ij} measurement.

$$P_{ij} = \left[\left(g_{ij} + \frac{gsh_{ij}}{2}\right)V_i^2 - V_i V_j\left(g_{ij}\cos\theta_{ij} + b_{ij}\sin\theta_{ij}\right)\right]D_{ij} \qquad (7)$$

The integration of D_{ij} variables would turn the problem into a non-convex and combinatorial one turning it virtually impossible to be solved in real time. An interesting way of addressing this issue without losing the continuous nature of the problem consists of integrating in h(x) an equation as (6). This equation has 0 and 1 as its only roots so that, while x is a continuous real valued variable, its value is enforced to 0 or to 1 in the course of the State Estimation process.

Regarding the application of this technique to a real-time State Estimation, it is important to notice that there may be some information in the Database but it can be suspicious. In this case, equation (8) is used.

$$D_{ij}^{meas} = D_{ij}^2 + \varepsilon_k \qquad (8)$$

This equation means that:

- the output value (0.0 or 1.0) can coincide with the input value. In this case, the error ε_k is zero meaning that the information in the Database is the most adjusted one to the whole set of measurements;
- if the measured value for D_{ij} - value present in the Database – is 1.0 or 0.0 and, along the algorithm, the D_{ij} value starts to assume values on the opposite direction of the input measured value, this is interpreted as a situation for which the state of the switching device is unknown.

If a change as referred occurs, or if the state of the switching device ij is declared unknown right from the beginning of the algorithm, then equation (9) is used. In this case, as the error tends to 0.0 along the state estimation process, the value of D_{ij} tends to 1.0 or to 0.0.

$$0 = D_{ij}^2 - D_{ij} + \varepsilon_k \qquad (9)$$

In this approach, D_{ij} variables are not used for all branch or switching devices in the network. In our implementation, the switching devices in the SCADA Database have a field expressing the quality of the available information, in the sense it can be assigned a suspicious mark or be declared unknown. The suspicious mark can be assigned in two ways. Firstly, the current status of the switching devices is crossed with information from analogue measurements for power flows or currents. Secondly, if there are time skew problems in transmitting information to the control centers the digital and analogue measurements may display larger errors in some areas of the network.

The introduction of equations as (8) and (9) in the optimization problem (5) has an impact on the convexity of the surface to analyse. This impact can be softened by an adequate selection of the weights to assign to the corresponding topological variables.

The use of this approach corresponds to a way to turn the traditional State Estimation flexible enough to change the current data if that is more adequate given the whole set of available measurements. In other words, it is a way to cope with the problems that can be encountered in real life situations without forcing the solution to an a priori direction, that is, without fixing the topology in operation before actually running the State Estimation Algorithm.

IV. Simulation Results

A. Test System

The IEEE 24 bus network was used to evaluate the performance of the two described approaches. The topology of the system as well as the measurement set is shown in Figure 1. The test system data are given in references [11] and [12]. Reference [12] also includes the description of the system with all substations modelled at the bus section level. We focused our attention on the substations corresponding to buses 14, 15, 16 and 24 of the original system in Figure 1.

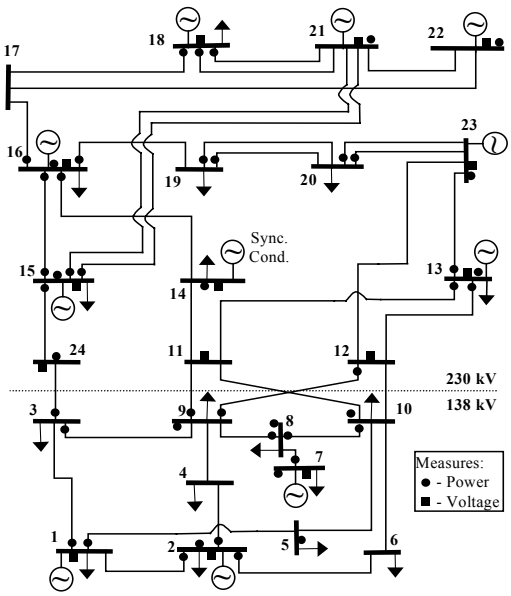

Figure 1 – IEEE 24 bus Test System.

The simulation results are separated in two groups, A and B. Figures 2 and 3 show the detailed representation of the substation for cases A and B, respectively. The criteria to select the suspect substations are discussed in [1] and [5].

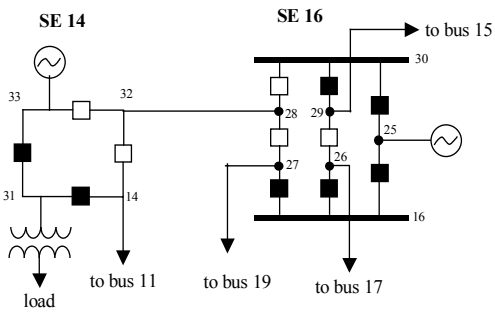

Figure 2 – Substations 14 and 16 modeled at section level (Case A).

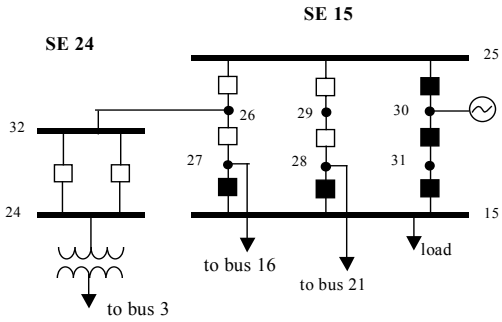

Figure 3 – Substations 15 and 24 modeled at section level (Case B).

Different types of topology errors were simulated:

a) Inclusion errors, which occur when the status of switching branches responsible for connecting/disconnecting a line to the system are reported to the estimator as closed while they are actually open (that is, the line is erroneously considered to be in operation in the system model);
b) Exclusion error, when the line is erroneously disconnected in the system model;
c) By-pass error, when an incorrect by-pass of the substation is considered in the system model.

The simulated tests considered for cases A and B are described in Table 1. The second and third columns of Table 1 show the switching branches (SB) involved in each topology error for both cases. The correct and simulated statuses for those branches are presented in the two remaining columns of Table 1.

Table 1 - Simulated topology errors for cases A and B

Error Type	Involved SB Case A	Involved SB Case B	Correct Status	Simulated Status
Inclusion	28-30	25-26	0	1
	14-32	24-32	0	1
Exclusion	28-30	25-26	1	0
	14-32	24-32	1	0
By-Pass	16-26	25-26	1	0
	26-29	15-27	1	0
	29-30	26-27	0	1

B. Results for Model 1

The results obtained with model 1 are presented in Table 2. The normalized Lagrange multipliers are used to select the suspect switching branches shown in the third column of Table 2, as described in section 2 of the paper. The fourth column presents the alternative hypotheses for which the computed conditional probabilities, shown in the last column, are different from zero. Note that, for all cases, the largest conditional probability is associated with the correct status combination. In the inclusion error cases, more than one status combination can represent the disconnection of the line from the network. This fact is reflected in the conditional probability values, which are nonzero for all those combinations, as shown in Table 2.

C. Results for Model 2

Model 2 was also used to analyse the topological situations referred as Cases A and B, in each case for the three described errors. The formulation was able to detect the correct position of the breakers and the corresponding number of iterations is indicated in Table 3.

D. Remarks about the Performances of Models 1 and 2

The method outlined in Section II of the paper is devised to perform topology error identification assuming that the suspect substations are modeled at the bus section level. However, this detailed representation is invoked only after an anomaly is detected at the conventional bus-branch representation level. By doing so, no extra variables are permanently included in the systemwide state estimation model, which is used most of the time. In addition, bad data localization is fully exploited, so that only a reduced subnetwork has to be represented at the more detailed bus section level, in case bad data processing is required [1],[2]. Another peculiar feature of Model 1 is the use of *a priori* state variable information, which avoids definition of multiple reference angles when islanding occurs during topology error processing.

As an appraisal of the Model 1's performance, the results presented in Section IV confirm that the *a posteriori* probability values provided by the Bayes' theorem approach are very effective in pointing out the right combination of switching branch status.

The good performance of the method based on the DC network model, as discussed above, has encouraged its extension to non-linear network models, which is currently being pursued by the authors.

Table 2 – Results for Model 1

Model 1		Suspect SBs	Alternative Hypothesis	P(H_i|z)
CASE A	Inclusion	28-30; 14-32	00	0.1894
			10	0.3276
			01	0.4830
	Exclusion	26-29; 16-27; 29-30; 25-30; 16-25; 16-26; 28-30; 14-32	01111111	0.9994
			11111111	0.0006
	By-Pass	16-26; 29-30; 26-29; 16-27	1101	0.9991
			1111	0.0009
CASE B	Inclusion	15-31; 30-31; 25-30; 25-26; 24-32	11100	0.1037
			11101	0.1780
			11110	0.0903
			11011	0.2168
			11010	0.1103
			11000	0.1116
			11001	0.1892
	Exclusion	15-28; 15-27; 25-26; 24-32; 24-32	11101	0.9994
			11111	0.0006
	By-Pass	25-26; 15-27; 26-27; 24-32	1101	0.9992
			1111	0.0008

Table 3 – Results for Model 2

Model 2		Suspect SBs	No. iterations
(without topological errors)			4
CASE A	Inclusion	28-30; 14-32	8
	Exclusion	28-30; 14-32	4
	By-Pass	16-26; 29-30;26-29	5
CASE B	Inclusion	25-26; 24-32	10
	Exclusion	25-26; 24-32	4
	By-Pass	25-26; 15-27; 26-27	6

Regarding Model 2 it should be referred in the first place that it adopts a non-linear model to represent the operation conditions of the network. Secondly, it provides a set of results for all state variables – voltage magnitudes, voltage phases and topological variables – considered more adequate given the complete set of available measurements. This means that, perhaps more than in the case of Model 1, the performance of Model 2 depends on the redundancy of the measurement vector, in general, and eventually around the physical location of the breaker under suspicion. Regarding the results in Table 3 it should be noticed that the number of iterations on the unique state estimation run that is required in each case increases when topological errors are considered. In both A and B cases, the Inclusion type errors are the most difficult to address. This is in line with the results in Table 2 considering Model 1. In this case, the Inclusion errors lead to several alternative connections having non zero conditional probabilities.

V. CONCLUSIONS

State estimation procedures became crucial applications both for composite generation/transmission systems and for distribution networks. Although the migration of existing EMS applications to the DMS environment is not straightforward, traditional modules assume that it is possible to determine beyond any doubt the network topology using information from switching devices and occasionally making corrections using heuristic rules. This is not always true and becomes more difficult to implement in distribution networks.

Having this in mind, the two research teams involved in this paper developed two different models to address the identification of topology errors. According to the tests that were performed and described, the two models provide interesting and remarkably in line results. These models enlarge the traditional understanding of Strict State Estimation making more evident the interface between topology identification and traditional state estimation and reducing the gap from purely academic formulations to real world applications.

VI. ACKNOWLEDGEMENT

Antonio Simões Costa thanks the support of the Brazilian National Research Council (CNPq). Elizete Lourenço acknowledges the financial support of Brazilian Agency for the improvement of High Education (CAPES). Kevin A. Clements acknowledges the support from National Science Foundation, under Grant ECS-9810288.

VII. REFERENCES

[1] Abur, A., Kim, H., Celik, M. K., (1995), "Identifying the Unknown Circuit Breaker Statuses in Power Networks", IEEE Transactions on Power Systems, vol. 10, no. 4, November 1995;

[2] Alsac, O., Vempati, N., Stott, B., Monticelli, A., (1997), "Generalized State Estimation", in Proceedings of the Power Industry Computer Applications Conference, PICA'97, Columbus, Ohio, USA, May 1997;

[3] Monticelli, A. (1993), "Modeling Circuit Breakers in Weighted Least Squares State Estimation", IEEE Transactions on Power Systems, vol. 8, no. 3, August 1993.

[4] Singh, H., Alvarado, F. L., (1994), "Network Topology Determination Using Least Absolute Value State Estimation", IEEE Transaction in Power Systems, vol. 10, no. 3, August 1995.

[5] A. Gómez, P. Zarco, V. H. Quintana, "Accurate Estimation of Circuit Breaker Positions", Large Engineering Systems Conference on Power Engineering – LESCOPE, Jun. 1998, pp 11-14.

[6] Clements, K.A. and Simões Costa, A., (1997), "Topology Error Identification Using Normalized Lagrange Multipliers", IEEE Transactions on Power Systems, vol. 13, no. 2, May 1997.

[7] E. M. Lourenço, A. Simões Costa, "Topology Error Identification via Normalized Lagrange Multipliers and Hypothesis Testing", XIII Automation Brazilian Conference, Sep. 2000, pp 271-276. (in Portuguese), http://www.labspot.ufsc.br/~simoes/pesquisa/cba071.pdf

[8] Pereira, J., Saraiva, J. T., Miranda, V., (2000), "Some Practical Issues in the Migration of State Estimation Modules From EMS to DMS System", in Proceedings of the 6th International Conference on Probabilistic Methods Applied to Power Systems, PMAPS, Funchal, Madeira, Portugal, September 2000.

[9] K. A. Clements, "Static State Estimation With *A priori* Information", Internal Report, Worcester Polytechnic Institute - WPI, 1998.

[10] K. A. Clements, "Bilateral Transaction Reconciliation", Internal Report, Worcester Polytechnic Institute - WPI, 1998.

[11] IEEE RTS Task Force of APM Subcommittee, "IEEE Reliability Test System", IEEE PAS, vol-98, No. 6, Nov/Dec. 1979, pp 2047-2054.

[12] R. Billinton, P.K. Vohra and Sudhir Kumar, "Effect of Station Originated Outages in a Composite System Adequancy Evaluation of the IEEE Reliability Test System", IEEE PAS, vol-104, No. 10, Oct. 1985, pp 2649-2656.

Jorge Correia Pereira received his licenciado degree from Faculdade de Ciências da Univ. do Porto in Applied Mathematics in 1991. In 1995 he got his MSc from Faculdade de Engenharia da Universidade do Porto, FEUP. In 1991 he joined INESC, now INESC Porto as a researcher and since 1995 he is with Faculdade de Economia da Universidade do Porto as Assistente. He is currently finishing his PhD with a work on the application of soft computing techniques to State Estimation.

João Tomé Saraiva (Member, IEEE) received his degree and PhD in Electrical and Computer Engineering from FEUP in 1985 and 1993. He is currently with FEUP where he gives lectures on market issues and EMS/DMS systems in the master course. In 1985 he joined INESC – a private research institute – where he is research manager. He was head researcher or collaborated in several projects related with the development of DMS systems, quality in power systems in the scope of re-regulation and tariffs due for the use of transmission and distribution networks.

Vladimiro Miranda (Member IEEE) received his licenciado, PhD and Agregado degrees from Faculdade de Engenharia da Universidade do Porto in 1977, 1982 and 1991, all in Electrical Engeneering. In 1981 he joined FEUP and currently he is Prof. Associado. In 1985 he joined INESC, now INESC Porto, where he was head of project and he is now member of he Board of Directors. From 1996 to 1998 he was President of the Board of INESC Macau. He has authored or co-authored in issues related with Power System planning and the application of soft computing techniques to Power Systems.

Antonio Simões Costa (Member, IEEE) received his degree in Electrical Engineering from Federal University of Pará, Brazil, in 1973, and the M.Sc. and Ph.D. degrees in Electrical Engineering from Federal University of Santa Catarina (UFSC), Brazil, in 1975, and University of Waterloo, Canada, in 1981, respectively. Since 1975 he is with UFSC Department of Electrical Engineering. His research interests are concerned with computer methods for power operation and control.

Elizete Maria Lourenço (Student Member, IEEE) received her degree in Electrical Engineering and her M.Sc. degree both from UFSC, Brazil, in 1992 and 1994, respectively. Since 1995 she is a Faculty member with Federal University of Paraná, Brazil. She is currently working towards her Ph.D. degree at UFSC. Her research interests are in the area of computer methods for power system operations.

Kevin A. Clements (Fellow, IEEE) received the B.S. degree in Electrical Engineering from Manhattan College, Bronx, NY, in 1963, and the M.S. and Ph.D. degrees from Polytechnic Institute of Brooklyn, NY, in 1967 and 1970, respectively. In 1970 he joined the Electrical and Computer Engineering Department at Worcester Polytechnic Institute, Worcester, MA, where he is presently a Professor. His research interests include monitoring and control of electric power systems, power system stability, and methods for solution of large-scale systems.