A FUZZY INFERENCE SYSTEM TO VOLTAGE/VAR CONTROL IN DMS - DISTRIBUTION MANAGEMENT SYSTEM

Vladimiro Miranda
vmiranda@inescporto.pt

Patricia Calisto
fsf@inescporto.pt

INESC - Instituto de Engenharia de Sistemas e Computadores do Porto
P. República 93 - 4050 Porto - PORTUGAL - Fax: 351.2.205 55 00
FEUP – Faculdade de Engenharia, Universidade do Porto

Abstract – This paper demonstrates the feasibility of the concept of fuzzy controller for voltage control or loss minimization. Cascading Mamdani controllers are used together with sensitivities derived after a fuzzy clustering process over voltage profiles. Three to four iteration steps with a Newton-Raphson power flow routine are enough to recover voltages into admissible bands, demonstrating the efficiency of the approach.

Keywords: Fuzzy Control, Artificial Neural Networks, Voltage/Var control

1. INTRODUCTION

One of the modules needed in DMS (Distribution Management Systems) or EMS (Energy Management Systems) is one that suggests a number of control actions to keep node voltages inside limits and move the operation point so that losses are minimized. The control actions may be exerted on transformer taps, capacitor banks, generator excitation or FACTS devices. Distribution networks are at present becoming very complex, namely with the addition in large scale of distributed generation, and in some cases this generation also allows voltage control.

In a DMS environment, data are gathered by a SCADA and control actions exerted through it. These actions may result automatically from software or may be issued by an operator, after receiving advice from a decision aid tool.

In this paper, we will describe a new architecture for a DMS module aiming at Voltage/Var control and loss minimization. This architecture is based on the articulation of cascading fuzzy controllers of the Mamdani type, constituting a fuzzy inference system, with a power flow routine that periodically evaluates the effects of control actions. The fuzzy rules are related to the efficiency of a control action and the set point of each control.

Besides aiming at keeping all voltages inside the allowed band or reducing system losses, the fuzzy inference controller also aims at retaining controllability of the system, i.e., it suggests a control vector of actions that will, as much as possible, keep the control set points well inside their possible range.

Before a final control decision is reached, the controller simulates a series of control steps and interacts with a power flow routine to evaluate the consequences of each move and successively correct and adapt the sensitivities for control efficiency and control margin.

One will show that in a realistic problem with several possible control actions (generator excitation and transformer taps) the controller reaches a decision solution in a short number of steps (demanding only 3 to 4 power flow calculations) or iterations and therefore the technique is suitable for real-time application in a DMS environment.

A previous and very interesting and successful work must be referenced, with application in practice, following the idea of building a fuzzy reasoning platform to organize a voltage and reactive power controller [1], and in general of introducing fuzzy set concepts in the control of power systems and subsystems [2].

Most efforts in the past in the application of fuzzy control techniques to power systems had been applied to areas related with stability. Interesting and didactic examples of these attempts are described in [3]

The approach of using fuzzy logic concepts in power system control challenges the use of heavy alternatives, such as using simulated annealing [4] or genetic algorithms for the same purpose of deriving control actions to control voltage levels or reduce losses, because it seems to be some orders of magnitude more efficient in terms of computing effort. The robustness of the fuzzy logic approach in extremely difficult convergence conditions remains to be researched – however, this is also a challenge to other approaches.

2. BASIC DATA AND VARIABLES

For simplicity, in this chapter we will describe the basic data and variables for a Voltage controller, because a controller aiming at reducing losses has the same structure.

In a DMS/EMS database, we will have available data about lines and network topology, transformers (namely tap-changing), generators or capacitor banks. The database also stores data specified by the operator, such as limits for over- and under-voltage at the nodes of the grid. Furthermore, from the SCADA or from the State Estimation module of the DMS/EMS one receives timely information on loads and voltages, as well as the position of controllers in the system.

As control devices, we have assumed that one could act on transformer taps, switching capacitor banks or generator excitation. However, the model does not exclude other forms of control.

The purpose was to design a controller that, in a DMS/EMS environment, would react when sensing that voltage thresholds were being violated. This reaction would mean defining new set points for generator voltage or for transformer (or capacitor) taps.

The factors to take in account are:

- The "evaluation of severity" of the most violated constraint – the controller will act to eliminate the most severe constraint violation at any time. For voltages, this means that the corresponding node must be identified
- The "efficiency" of a control action – to reduce a constraint violation, one has available a set of control actions (one can select any one out of a number of tap-changing transformers or generators). However, depending on their nature and the location of the respective devices in the network, the impact of each action will be different.
- The "availability for control" of the control action – using a certain transformer tap to correct some low voltage could be very efficient… if only the "position" of the controlling device were not already at its limit.

These factors may all receive a linguistic description, once one defines their universes of discourse.

2.1. Efficiency

Each change in a control position $\Pi_j(.)$ at a node j will have impact on the voltage value at another node k. A classical way to evaluate such impact is by means of sensitivity coefficients S_{jk} obtained from partial derivative concepts

$$S_{kj} = \frac{\partial V_k}{\partial \Pi_j}$$

However, partial derivatives are local concepts and do not give a correct picture of the shape of the function and of the real impact a in controlled value for larger than infinitesimal changes. This has been well observed in [1], where a scheme based on "Experiment Planning" has been suggested to derive more adequate sensitivities.

In any case, it has been shown that sensitivities evaluated from imposing $\Delta\Pi$ variations in controls and checking the impact on the nodal voltages work better. In our work we did not follow the suggestion of [1] but we actually built sensitivity matrices by organizing a series of experiments with discrete step changes in each possible controlling variable.

The sensitivity values were scaled into an interval [-1,1] generating therefore a signal called "efficiency".

2.2. Fuzzy clustering of load profiles

A set of matrices may be organized and stored as data, to be selected for use depending on the loading condition of the power system. In [1] the method followed has been to define three Load Conditions (Low, Medium and High Load), to calculate the Sensitivities for each Load condition and then, when facing an actual vector of nodal loads, to calculate an interpolated value for the sensitivity factors.

Not far from such idea, the model in this paper suggests the adoption of concepts from fuzzy clustering.

A Power Profile is a vector **L**(t) of nodal generations and loads at a certain time t. Because different types of consumers will be supplied at distinct locations, the load will not rise or descend simultaneously at all nodes.

It is therefore conceivable that one may build a set of power profiles, from several days at distinct hours, and then apply a clustering technique in order to find some meta-structure in such set.

We have selected the Bezdek's Fuzzy c-Means [5] fuzzy clustering algorithm for this purpose. The main reasons are:

- the method allows us to identify the *centroids* or *prototypes* of the clusters defined, and
- the method associates to each Power Profile a membership value to each cluster, represented by its centroid.

Then, given a Power Profile, it is possible to calculate its membership to each cluster. Define

$\mathbf{V}_i$: vector denoting the prototype of cluster i
$\mathbf{L}(t)$: vector of the power profile at time t
d_i : distance between $\mathbf{L}(t)$ and the prototype of cluster i, with $d_i = \|\mathbf{L}(t) - \mathbf{V}_i\|$ (usually calculated with an Euclidean norm)
c : number of clusters
μ_i : membership of profile $\mathbf{L}(t)$ to cluster i
$m \in [1,+\infty[$: weighting exponent, a parameter defining the more "fuzzy" or "hard" character of the clustering; adopted values for m are close to 2.

We have then

$$\mu_i = \left[\sum_{k=1}^{c} \left(\frac{d_i}{d_k} \right)^{\frac{2}{(m-1)}} \right]^{-1}$$

As we are dealing with a fuzzy partition, we know that

$$\sum_{k=1}^{c} \mu_k = 1$$

A sensitivity coefficient S(t) associated with a given power profile at time t may then be calculated from the corresponding sensitivity coefficients S_k for the prototypes:

$$S(t) = \sum_{k=1}^{c} \mu_k S_k$$

In practice, instead of performing a fuzzy clustering of power profiles, one may directly define some anchor profiles $\mathbf{V}_k$ that will act as prototypes. For instance, one may select profiles for Low, Medium and High Load, calculate the sensitivities associated to them and store them in the DMS/EMS data base to be used in calculations at any time t for profile **L**(t).

2.3. Evaluation of severity

For Voltage control, the condition to be met is

$$V_k^{min} \le V_k \le V_k^{Max} \quad \text{for all k nodes.}$$

This creates a "dead band" where no control action is required. Outside this band, the severity of the violation is proportional to its value, either $V_k - V_k^{min}$ or $V_k - V_k^{Max}$.

A plausible interval for violations is defined, say [a,b] and a violation in this interval is made to correspond to a value in an interval [-1, 1]. We have, therefore, created a signal called "severity".

2.4. Position

A controlling variable Π_j is associated with a control range $\left[\Pi_j^{min}, \Pi_j^{Max}\right]$ and it may be changed within such interval, which includes in a more or less central location the nominal value Π_j^{nom}.

We have mapped the interval $\left[\Pi_j^{min}, \Pi_j^{nom}\right]$ into $[0.85, 1]$ and $\left[\Pi_j^{nom}, \Pi_j^{Max}\right]$ into $[1, 1.15]$ and therefore built a signal called "position" of the control.

3. CONTROLLER DESIGN

3.1. Basic architecture

The Voltage controller must produce a control command that is a vector of control signals, one for each controlling device.

In our model, each of the controlling device signals is controlled by a controller with the architecture displayed in Figure 1.

The control system relies on two Mamdani fuzzy controllers, C1 and C2. Together, they accumulate a rule base; the activation of these rules generates the control signal required for a control device (e.g., a generator excitation or a tap changing transformer).

In both controllers we have used, for simplicity and with good results, triangular fuzzy sets.

The universe of discourse of all variables has been partitioned in 5 linguistic values – NB (negative big); NS (negative small); ZE (zero); PS (positive small); PB (positive big).

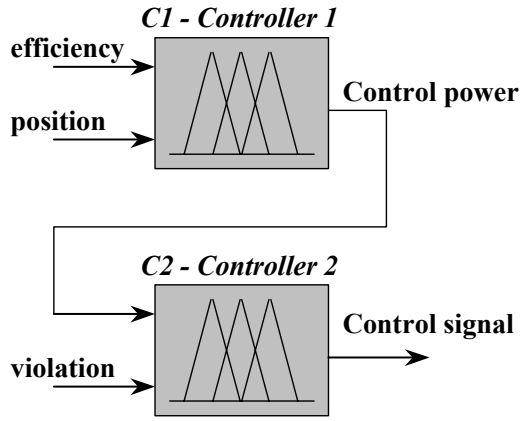

Figure 1 – Cascading fuzzy controllers forming a control block

These variables have been evenly distributed within the interval defining the universe of discourse – [-1, 1] in all cases except for position.

In the fuzzy set operations performed, we have used the min operator as the T-norm (for intersections and implications) and the Max operator as the S-norm (for union).

The defuzzification method adopted has been the Center of Mass, in both fuzzy controllers. This means that the output of C1 is defuzzified before inputting in C2.

The defuzzified control signal output, in the range [-1, 1], is then mapped into the admissible range for the controlling device. If this range is composed of discrete values (such as transformer taps), it is rounded to the most convenient nearest value.

The fuzzy associative memory or rule map for C1 and C2 has the form of Table 1.

Table 1 – Rule map for the Fuzzy Controllers (meaning of linguistic labels: in the text)

	NB	**NS**	**ZE**	**PS**	**PB**
NB	PB	PB	PB	PS	ZE
NS	PB	PB	PS	ZE	NS
ZE	PB	PS	ZE	PS	NB.
PS	PS	ZE	NS	NB	NB
PB	ZE	NS	NB	NB	NB

The controller C1 is designed as a proportional controller and controller C2 is designed as derivative, i.e., its control signal represents a deviation to the previous controlled variable value.

This design for C1 guarantees that a controlling variable near its limits will only be used if this represents moving the control variable to inside the interval – and that there

will be an attempt to move it inside whenever it is beneficial.

Therefore, this design favors the maintenance of control variables inside their ranges – this means that the controller system tends to keep a control margin available in every variable, which is very important and useful from an operation point of view.

3.2. Controller algorithm

The controller algorithm runs in a series of iterative steps:

1. Evaluate the largest voltage violation
2. Evaluate the efficiency and position of available control devices
3. Generate an incremental control signal that changes control states (taps or generator excitation)
4. Limit changes by applying an iteration step size
5. Evaluate system voltages for the corrected profile after applying the control signals. If violations still exist go back to point 1, else stop.

The evaluation of system voltages is done using a power flow routine (in our case, with a Newton-Raphson algorithm).

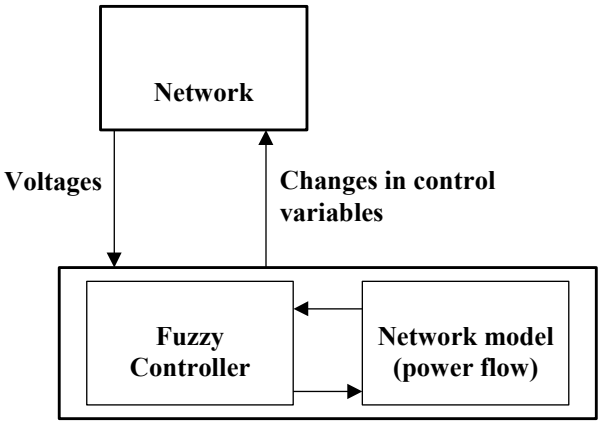

Figure 2 – General scheme of the control loop

4. APPLICATION EXAMPLE

Following the principles described in the previous sections, we have tested the concept over a system based on a real network from Brazil, whose data are described in reference [1].

The system is represented by a network with 26 buses, including 5 power injection buses and 21 load buses – see Figure 3. It has 48 branches and 12 transformers, and the total load is in the range of 800 MW and 350 MVAr for a peak load profile.

There are two main voltage levels in the system, and the main power injection comes from an interface with an interconnected transmission system (bus 7). The other power injection sources are generators.

The operator has the possibility to control voltage levels by acting at 6 places: three generators and three transformer groups (transformers are in parallel and, of course, their taps are changed simultaneously).

Running a power flow routine shows that, at peak hour, many node voltages are well below the limit of 0.9 p.u. determined as the admissible threshold. In fact, 50% of the buses had a voltage below that limit – see Figure 4.

We have calculated the sensitivity coefficients for node voltages relative to the 6 controlling variables, and built the required matrices.

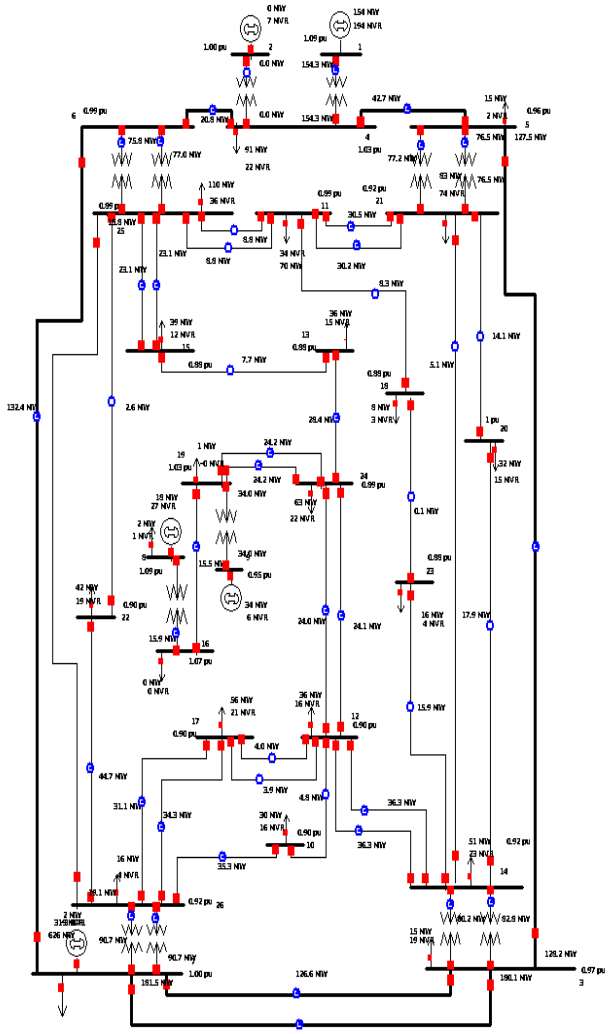

Figure 3 – Single line diagram of the test system.

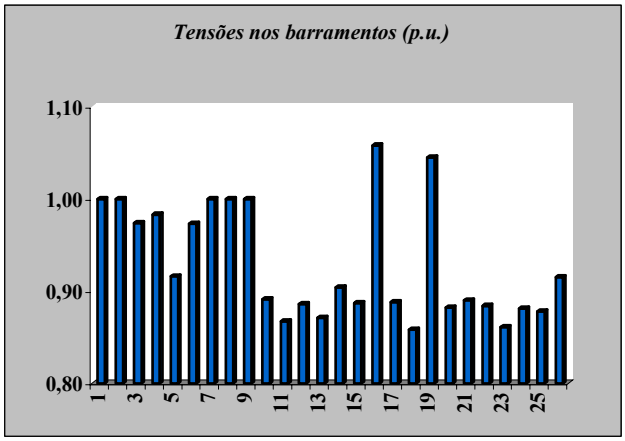

Figure 4 – Voltage profile at peak hour with controlling variables at nominal value (no control action)

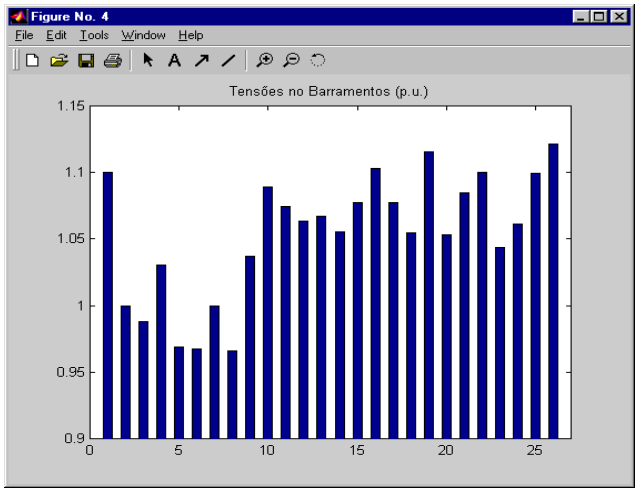

Figure 5 – Voltage profile at peak hour after the control action proposed by the fuzzy controller system

In order to build the voltage controller, we have prepared 6 control blocks similar to the one in Figure 1 – a block to each control variable (3 for generator voltages and 3 for transformer taps).

All simulations were performed in MATLAB environment and with a Newton-Raphson power flow routine.

Applying the control algorithm, in only three iterations we reached a fully feasible network condition, with all voltages inside the admissible band – see Figure 5. Also, no voltage appeared above 1.15 p.u., which was set as the upper limit.

This speed of convergence has been recognized in a number of runs and experiments made. Typically, only three to four iterations are required until a feasible voltage profile is reached.

5. EXPERIMENT WITH AN ANN

We have conducted a further experiment, replacing the fuzzy controller C2 by an artificial neural network (ANN) representing controller C3. We have thus generated 1053 power profiles and generated a data set by applying the fuzzy controller and recording the adequate control signal to restore voltages to their admissible band.

This set has been divided into a training and a test set, and a neural network has been trained. The architecture of a successful ANN was 2-6-2-5-2-1, with linear activation functions for the input and output layers and hyperbolic tangent activation function for the neurons in the other layers.

The structure of a control block is now the one represented in Figure 6.

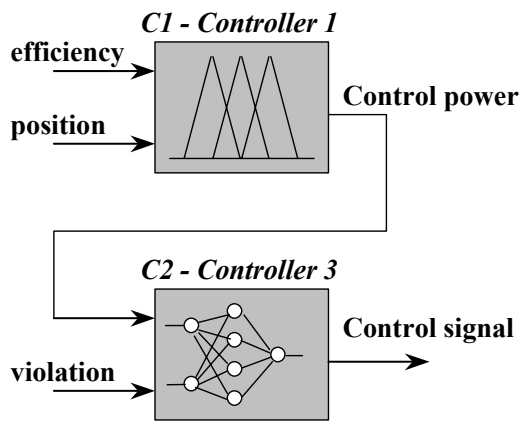

Figure 6 – Control block with an ANN replacing one of the fuzzy controllers

As expected, when tested this scheme offered comparable results of the same quality as the one using only Mamdani fuzzy controllers.

In terms of practical implementation in a DMS/EMS environment, the scheme using the ANN may offer some slight advantages in terms of the generation and organization of the software modules.

6. AVOIDING CYCLING

The model has proved well in recovering feasibility for systems with violation of constraints. However, if the algorithm cannot find a feasible solution, it may enter in a cycle, alternatively correcting voltage at one bus, which originates a violation at another bus whose correction, in turn, will generate again a violation at the previous bus and so forth.

To prevent this to happen and guarantee a solution, there are two mechanisms available:

a) upon detection of cycling or after a number of iterations without reaching a stable solution, the

iteration step is reduced; under a given threshold of step size, the algorithm is stopped

b) the best-so-far solution is memorized, to be available when the process stops.

The best-so-far solution is measured in terms of the nature of the constraint violations detected. For voltage control, two ways of selection have been included in the model: one that evaluates continuously the average value of violations and another that monitors and implements a min-max strategy, i.e., gives preference to minimizing the maximum violation detected.

7. MINIMIZING LOSSES

The basic scheme to achieve loss minimization is similar to the one presented for Voltage control. The following main adaptations are necessary:

a) calculation of sensitivity matrices relating variation in losses with control actions – again, instead of looking for partial derivatives, one looks for linear relations between changes (by step increments) in control variables and changes in system losses

b) redefinition of the variable "violation" – for power losses, a violation will be seen as the difference between actual losses and a pre-determined target of inferior value (could be 0, in an extreme case).

It goes without saying that the action of the voltage controller, by itself, already contributes significantly to reduce losses.

8. CONCLUSIONS

This paper demonstrates the feasibility of using a cascading set of fuzzy controllers of the Mamdani type to build a voltage control system to be integrated in a DMS/EMS environment.

The model developed gives place to an extremely efficient procedure that only requires a very small number of power flow runs to reach a good solution.

As a first order approach, it demonstrates great superiority over methods that search for optimal controls by using heavy algorithms such as simulated annealing or evolutionary computing. These ones will require hundreds of evaluations using a load flow routine, while the Fuzzy Control system only requires typically a number below 6.

However, because it is a method relying on sensitivities, one cannot hide that there is the theoretical possibility it may get trapped in local optima.

Of course, if one has available an alternative robust optimization method, one may always be able to generate off-line a training set of higher quality and try to improve the training of Artificial Neural Networks to be used as exemplified in Section 5 of this paper.

The report presented in this paper confirms therefore the results obtained by other researchers that the application of concepts of fuzzy inference to the Voltage/Var control and loss minimization problems is an excellent approach. Furthermore, one demonstrates that there is no need for a complex model building a fuzzy rule base and an inference engine: simply cascading Mamdani controllers achieves a very good result.

REFERENCES

[1] Marcio Junges, "Fuzzy Logic in voltage and reactive power control in power systems" (in Portuguese, "Lógica fuzzy em controle de tensão e potência reativa em sistemas de potência"), M.Sc. Thesis, Pontifícia Universidade Católica de Minas Gerais, no. 621.31J95|T - PucMinas Library, Belo Horizonte, Brazil, 2000.

[2] Petr Ekel, Luiz Terra, Marcio Junges, Vladimir Popov "Fuzzy Technology in the Design, Planning and Control of Power Systems and Subsystems", Procedings of EUFIT'98 - European Congress on Intelligent Techniques and Soft Computing, vol.2., pp. 1126-1130, Aachen, Germany, 1998

[3] "Electric Power Applications of Fuzzy Systems" (book), ed. Mohamed El-Hawary, IEEE Press Series on Power Engineering, 1998

[4] Jorge Pereira, J. Tomé Saraiva, Maria Teresa Ponce de Leão, "Identification of Operation Strategies of Distribution Networks Using a Simulated Annealing Approach", Proceedings of IEEE Budapest Power Tech'99, paper BPT99-357-17, August 1999

[5] James C. Bezdek, "Pattern Recognition with Fuzzy Objective Function Algorithms" (book), Plenum Press, New York, 1981