An Integrated Load Allocation/State Estimation Approach for Distribution Networks

Jorge Pereira, J. T. Saraiva, *Member, IEEE,* V. Miranda, *Member, IEEE*

***Abstract*—In this paper we present a complete methodology to perform state estimation studies in distribution networks. Due to the peculiarities of these networks the traditional state estimation concept was enlarged in different ways. It includes a load allocation study, as a way to cope with the reduced number of real time measurements in SCADA database. The algorithm estimates binary values of topology variables, due to incomplete or erroneous topology information in the control center and it is able to include data modeled by fuzzy numbers as a way to include fuzzy results of the load allocation procedure or fuzzy assessments from experts. Finally, the paper describes a methodology developed to tune the weights to be used in the state estimation based on a Takagi-Sugeno fuzzy inference system. The paper includes a case study based in the IEEE 24 bus system to highlight and illustrate its application in a variety of situations.**

***Index Terms*— Distribution Networks, State Estimation, Fuzzy Sets, Topology, Inference.**

I. INTRODUCTION

State estimation studies correspond to a crucial application that can be considered traditional in transmission control centers. State Estimation uses a set of values measured on the system and transmitted to a control center via RTU's. This set of values doesn't give a coherent and complete image of the system due to a number of reasons:

- in general there are not measurement devices installed in the system to measure all possible variables;
- even for the existing devices the measured values are affected by errors;
- the measures available in the control center can be affected by time skew problems meaning that they can be available in the control center in different instants. This means that the values available at a certain instant can, in fact, be related to different system states.

In recent years, distribution systems evolved a lot. They gained several characteristics similar to transmission systems while maintaining several peculiarities. This means that state estimation modules specially directed to distribution networks should be developed namely to address the following issues:

- the advent of distributed, in several cases very volatile, generation leading to active distribution networks;
- the possibility of switching;
- the extension of electricity markets to retailing, due to the progressive separation between distribution network activities and retailing issues. Distribution network providers are paid by Tariffs for the Use of Networks requiring the knowledge of the system state;
- a reduced number of telemetered measurements;
- the quality of the available measurements for state estimation purposes namely because current measurements can be seen as incomplete since they don't give any indicate about the direction of the flow;
- the eventual absence of sign in measured power flows;
- the large dimension of distribution networks.

However, distribution networks suffered till recently from an investment shortage leading to a more reduced number of measurement devices. This fact turns even more challenging performing state estimation studies in distribution networks because State Estimation packages in use in transmission control centers can not simply migrate to distribution control centers. In fact, new techniques and approaches have to be developed to cope with the shortage of measurements, uncertainties regarding the status of switching devices and the eventual split of the system in analysis due to a switch that was considered to be closed and that, in fact, it is opened. In order to cope with these problems, we developed an integrated Load Allocation/State Estimation approach to include in Distribution Management Systems – DMS - having the following general characteristics:

- development of a load allocation procedure that uses as many information as possible to assign current or power values available at the substation feeders to the MV/LV substations. This procedure can be used not only in radial sections but also in meshed zones, and can be enhanced by including an estimation of losses. Ultimately, it corresponds to a strategy to ensure system observability;
- possibility of including topology variables in the state vector, while preserving the continuity and differentiability of the problem, and so the use of

Manuscript received February 20, 2004.

The research work described in this paper was financed by Portuguese FCT through the project COMPETE - Component Technology Software Applied to Power Systems with reference POCTI/ESE/39723/2001.

Financiamento FCT/POCTI

União Europeia
FEDER

Governo da República Portuguesa

FCT
Fundação para a Ciência e a Tecnologia

J. Pereira is with Faculdade de Economia da Univ. do Porto, Portugal, and with INESC Porto, Campus da FEUP, Rua Dr. Roberto Frias, 4200-465 Porto, Portugal, jpereira@inescporto.pt.

J. T. Saraiva is with the Electrotenique and Computers Dept. of Faculdade de Engenharia da Univ. do Porto, Portugal, and with INESC Porto, Campus da FEUP, Rua Dr. Roberto Frias, 4200-465 Porto, Portugal, jsaraiva@fe.up.pt.

V. Miranda is with the Electrotenique and Computers Dept. of Faculdade de Engenharia da Univ. do Porto, Portugal, and with INESC Porto, Campus da FEUP, Rua Dr. Roberto Frias, 4200-465 Porto, Portugal, vmiranda@fe.up.pt.

traditional Newton based iterative methods;

- possibility of including measures defined in a qualitative way using fuzzy sets, as a way to cope with the reduced number of telemetered measures;
- possibility of changing the sign of a measured flow, if this power has no sign or when an error is detected;
- possibility of system splitting requiring fixing a phase reference to each of the electrically disconnected islands.

The application requires the use of a set of weights that are computed using a fuzzy inference mechanism of the Takagi-Sugeno type [1]. The corresponding rules are trained using very simple and didactic small networks. The generalization capacity of the fuzzy inference tool is then used to provide good results for larger networks.

The paper is organized as follows. Section II details the data to be used and the load allocation principles. Section III describes the developed mathematical models to consider topology problems, system splitting and the integration of fuzzy assessments. Section IV describes the development of the inference system for weight tuning and Section V includes a case study to illustrate the application of these procedures and to highlight their interest.

II. Data For State Estimation in Distribution Networks

A. Fuzzy Data

The state estimation model to be presented can incorporate information affected by uncertainty using Fuzzy Set Theory [2]. Based on historical consumption databases, one can derive "typical" load curves defining a band of possible values. Using these typical curves it is possible to obtain fuzzy assessments for active and reactive loads. The developed approach uses fuzzy numbers to model this kind of information that we will call fuzzy measurements.

Alternatively, one can obtain fuzzy assessments as translation of natural language propositions from experienced operators. Typically they have lots of qualitative information expressed in a non-mathematical way. These expressions from human language can be transformed in fuzzy numbers that will also be used as fuzzy measurements.

B. Load Allocation

Another way to obtain fuzzy measurements corresponds to the use of a fuzzy load allocation algorithm described in [3]. It consists of an allocation process of load values admitting some ranges of uncertainty. The algorithm conducts a process of rough allocation based on information on actual measurements and on data about installed capacity and power and energy consumption at LV substations. This process generates a fuzzy load allocation, which is then corrected by the fuzzy state estimation study to generate a compatible set of load allocations, coherent with available real time measurements recorded in the SCADA.

This load allocation algorithm is useful not only when the network is radial but also when it is meshed or mixed. This algorithm is particularly useful when we have little information about the loads and there is at least one measured value in unobservable areas of power systems.

III. Fuzzy State Estimation

A. Traditional State Estimation

Let us consider a system having n nodes and m available measurements related with voltages, branch currents, active and reactive flows, generated powers and loads. Let us admit that the state variables are the nodal voltages and phases and that a bus was selected for phase reference. To estimate the values of the resulting 2.n-1 state variables it is necessary to have at least 2.n-1 measurements. However, it is advisable to have a certain redundancy degree so that the results are more immune from errors affecting some particular measurements. According to these ideas, let us admit that:

- Z is the measurement vector (m elements);
- X is the state vector (2.n-1 elements);
- h(X) is a vector of m functions relating each measured variable with state variables;
- ε is the error vector of measured values (m elements).

These elements are related by (1). In this general model the elements of the error vector ε are random variables having zero mean and a covariance matrix R. In this matrix one usually assumes that R_{ij} covariances between measurements i and j are 0.0 meaning that the measurements are considered independent. In this case, R is a diagonal matrix.

$$Z = h(X) + \varepsilon \tag{1}$$

The most traditional State Estimation algorithm is the Weighted Least Squares – WLS – that will now be very briefly summarized. This algorithm basically aims at minimizing the sum of the squares of the measurement errors ε weighted by the elements in the inverse of R (2). This means that in a State Estimation study we aim at identifying the elements in X that better explain the values in the measurement vector Z.

$$\min \left[Z - h(X)\right]^T R^{-1} \left[Z - h(X)\right] \tag{2}$$

For this problem, it is possible to obtain its stationary conditions corresponding to the non-linear set of equations (3). In this expression, H is the Jacobean matrix of the measurement vector h(X).

$$H(X)^T R^{-1} \left[Z - h(X)\right] = 0 \tag{3}$$

This set of non-linear equations can be solved in an iterative way using the Newton-Raphson method. In iteration k+1, the values of the state variables X are obtained using (4). In this recursive expression, G is the gain matrix (5) and X^k and X^{k+1} are the state vectors in iterations k and k+1.

$$X^{k+1} = X^k + \left(G^k\right)^{-1} \left[H\left(X^k\right)\right]^T R^{-1} \left[Z - h\left(X^k\right)\right] = 0 \tag{4}$$

$$G^k = \left[H\left(X^k\right)\right]^T R^{-1} \left[H\left(X^k\right)\right] \tag{5}$$

When the iterative process converges, one obtains values for the state variables and, using them, for every other variable in the network (active and reactive injections, active and reactive flows and currents and active and reactive losses).

The literature describes many other state estimation models

and algorithms [4], [5], some of them specially interesting for distribution networks. In [5], Lu, Teng and Liu describe an algorithm that converts measurements to current equivalents so that the gain matrix is constant along the iterative process. This kind of approaches is specially interesting since current measurements are most common in distribution networks.

B. Topology Uncertainties

In distribution networks, the topology in operation can change very frequently because switching is usually considered as a resource that can be used to improve system operation or to reduce the impact of outages. On the contrary, in transmission networks one aims at operating the system in a meshed way with as many elements as possible. The frequent topology changes in distribution networks together with the reduced number of installed measurement devices can lead to situations in which the topology is not known beyond any doubt even after running the Topology Processor resident in the Distribution Management System.

The previous reasoning means that in distribution networks State Estimation gains a new dimension because one doesn't simply want to estimate values for analogue variables but in fact would also be interested in identifying the binary value of some topology variables. These 0/1 variables would indicate if a switching device was opened or closed or a branch was connected or not. The introduction of binary variables in optimization studies increases their complexity turning the problems in non continuous discrete combinatorial ones.

Let us admit that D_{ij} is a 0/1 topology variable that represents the opened or closed status of a switching device in branch i-j. This variable will have to be used when computing the active flow in branch i-j (6) or the active injected power in branch i as a sum of the flows in adjacent branches (7).

$$P_{ij} = \left[\left(g_{ij} + {g_{shij}}/{2}\right)V_i^2 - V_i V_j\left(g_{ij}\cos(\theta_{ij}) + b_{ij}\sin(\theta_{ij})\right)\right]D_{ij} \tag{6}$$

$$P_i = \sum_j P_{ij} \tag{7}$$

Several formulations available for discrete problems, approximate binary variables by continuous ones in $[0.0;1.0]$. When the optimal solution is identified, the value of these variables is rounded to the nearest integer. This approach does not guarantee that the final discrete solution is the optimal one of the original discrete problem. Other methodologies adopt Branch & Bound techniques or solve an initial problem that is successively constrained by Benders cuts. In our approach, we admit that topology variables are continuous by we constrain them by equations as (8) that in fact impose that each of these variables has values 0.0 or 1.0 in the final solution.

$$x^2 - x = 0 \tag{8}$$

Using this approach, the variable D_{ij} representing the state of branch i-j can be modeled in two ways:

- in the first case, there is information in the SCADA data base regarding this variable. However, we admit it can be wrong so that D_{ij} becomes a state variable. Therefore, it is included in X and vector h(X) integrates equation (9).

$$D_{ij}^{measured} = D_{ij}^2 + \varepsilon_{Dij} \tag{9}$$

- in the second case, we can admit there is no information about D_{ij} in the SCADA data base. Variable D_{ij} also becomes a state variable but it is now constrained by (10).

$$0 = D_{ij} - D_{ij}^2 + \varepsilon_{Dij} \tag{10}$$

Along the iterative process, as the errors tend to zero, the feasible solutions for D_{ij} variables are 0.0 and 1.0 so that we ensure their binary nature without compromising the continuous differentiable nature of the problem.

C. System Splitting

Introducing topology variables can also lead to the split of the system in different islands. A state estimation study can start admitting that a network is formed by a single fully electrically connected island but, along the iterative process while minimizing the sum of the square of the errors, the algorithm can evolve in a way that a switching device that was originally closed will in fact change its status. This can lead to the separation of the original system in two islands.

Traditional state estimation methods assume that the topology is fixed and so splitting in several islands is not possible. This is also related with a mathematical difficulty arising from the need of having a phase reference in each island. System splitting would require a single phase reference if the system was completely connected while being able to use a phase reference per island if that was the most adjusted topology given the whole set of data. This difficulty can be solved using (11) for each node having installed generation.

$$\theta_i = 0 + \varepsilon_{\theta i} \tag{11}$$

If the algorithm starts from a completely connected topology, we should assign a large weight to the phase measurement in the node having the largest generation capacity, while the weights assigned to other generation nodes should be small. This means that:

- if the single island topology is the most adjusted one given the whole set of available measurements, the phase in the node with the largest generation capacity is 0.0 and the phases in the remaining generation nodes will be affected by errors. However, these errors will not affect the final result since their weights are small;
- if the iterative process evolves to an islanded topology, there is flexibility enough to have a phase reference in each island. Each island has at least one generation node, and for each of these we have a 0.0 phase measurement.

D. Bad Data Analysis

In several real applications, it happens that some flow measurements have no sign or the sign is wrong. In order to incorporate this issue in the state estimation analysis, we included a bad data analysis process in the iterative state estimation process [6]. In our application, the bad data analysis is activated only after a pre-specified number of iterations is performed. From that point onwards, we identify bad data and for these measurements we use a re-weighting technique to reduce the weights associated to these

measurements. This technique has the advantage of maintaining the observability of the system, while being consistent with the topology treatment described in sections III.B and C. Apart from that, it is faster if compared with two step techniques.

Another advantage of this approach is related with the treatment of power flows with erroneous sign. If one power flow is identified as being a dad data then we can conduct an extra analysis to check if the computed power flow should in fact have the symmetrical value. In this case, instead of changing the weight of this power flow measurement, one will simply change the sign of the original measurement.

E. Incorporation of Fuzzy Data

The final issue addressed in this section is related with the integration of fuzzy uncertainties and how to reflect them on voltages, power and current flows, generated and load powers. This feature gives the algorithm a new degree of flexibility and a new field of applicability namely to distribution networks. In these networks the number of measurement devices is usually small so that running a state estimation code, as in transmission networks, would be virtually impossible. In an attempt to run state estimation in distribution networks, we can run a Load Allocation study as referred in Section II or we can use data modeled by fuzzy numbers turning the problem into a Fuzzy State Estimation Model.

The first step of the Fuzzy State Estimation Model corresponds to run a crisp State Estimation study as described in Section III.A using the set of central values of the fuzzy measurement vector, $\tilde{Z}$. From this study we compute a state vector X_1 that will be used as a linearization point. In the second step, we compute the fuzzy deviations of the measurements (12) to be reflected in the state variables using (13). In this expression, G and H are the gain and the Jacobean matrixes built in the last iteration of the crisp state estimation ran in the first step.

$$\Delta\tilde{Z} = \tilde{Z} - h(X_1) \tag{12}$$

$$\Delta\tilde{X} = X_1 + (G^{-1}H^T R^{-1})\Delta\tilde{Z} \tag{13}$$

To compute fuzzy membership functions for flows and currents, we can use their crisp values obtained with the state vector computed in the first step. The flow, F_{ij}, in branch i-j depends on the voltage and phase in nodes i and j. Variations on F_{ij} can be approximated by (14) using voltage and phase fuzzy variations. Assuming that $J_{FL}(X_1)$ is a matrix including partial derivatives as the ones in (14), the fuzzy deviation $\Delta\tilde{F}_{ij}$ can be obtained in a more compact way using (15). In a final step, these fuzzy deviations are added to the crisp values obtained in the crisp state estimation (16).

$$\Delta\tilde{F}_{ij} \cong \left.\frac{\partial F_{ij}}{\partial \theta_i}\right|_{X1} \Delta\tilde{\theta}_i + \left.\frac{\partial F_{ij}}{\partial \theta_j}\right|_{X1} \Delta\tilde{\theta}_j + \left.\frac{\partial F_{ij}}{\partial V_i}\right|_{X1} \Delta\tilde{V}_i + \left.\frac{\partial F_{ij}}{\partial V_j}\right|_{X1} \Delta\tilde{V}_j \tag{14}$$

$$\Delta\tilde{F}_{ij} = \left[J_{FL}(X_1)\left(G^{-1}H^T R^{-1}\right)\right]\Delta\tilde{Z} \tag{15}$$

$$\tilde{F}_{ij} = F_{ij} + \Delta\tilde{F}_{ij} \tag{16}$$

Using the membership functions obtained for branch currents, we can obtain risk overload indices translating the possibility of branch currents overpass thermal limits as a result of the underlining uncertainties. The Overload Risk Index, ORI, can be defined as the maximum membership value among all membership values of branch currents that overpass the corresponding thermal limit (17).

$$ORI = \max\left(\mu_{\tilde{I}ij}(Iij) : Iij > Iij^{max}\right) \tag{17}$$

As an example, consider the current membership functions in Fig. 1. On the left case, the ORI index is α as the overload can occur for membership degrees lower than α but never for values higher than α. For the membership function on the right, the ORI is 1.0 since the current having 1.0 membership degree already overpasses its thermal limit.

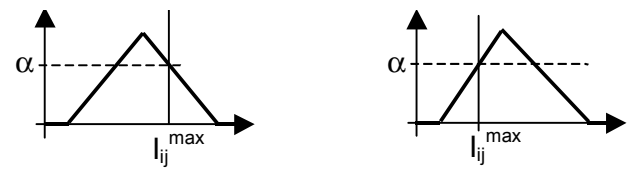

Fig. 1 – Membership function for the current in branch i-j.

IV. Inference System for Weight Tuning

The introduction of new equations as (9) and (10) in the model has a direct influence on the convexity of the surface representing the error function. The weights assigned to each equation also have an impact in that surface and so in the convergence process. Therefore, these weights are important to soften that surface and to improve the convergence, in terns of obtaining the correct solution in a smaller number of iterations. This conclusion was obtained after conducting an extensive series of experiments on different networks, namely small ones. The main objective of this Section is to describe an automatic way of setting weights to assign to topological variables based on the network characteristics.

The convergence improvement is obtained by using a Fuzzy Inference System to find a weight for topological variables based on the network characteristics. This inference process is based on the experience obtained from running a large number of state estimation exercises for small examples considering topological variables with unknown or with suspicious status. From each run, we saved the characteristics of the network in the proximity of the elements affected by the topological variables as well as the best weight identified for each situation. This set of cases formed a training set used to create a system having the capacity of extracting information to be used when new cases appear. This "intelligent" system uses fuzzy inference techniques and it is described in [7] and [8].

The Fuzzy Inference System corresponds to a set of rules and fuzzy operations based in fuzzy numbers to represent a set of fuzzy variables. In our approach, we used the Takagi-Sugeno system with 256 rules, 5 input variables and 1 output. The output corresponds, for each topology variable, to its corresponding weight.

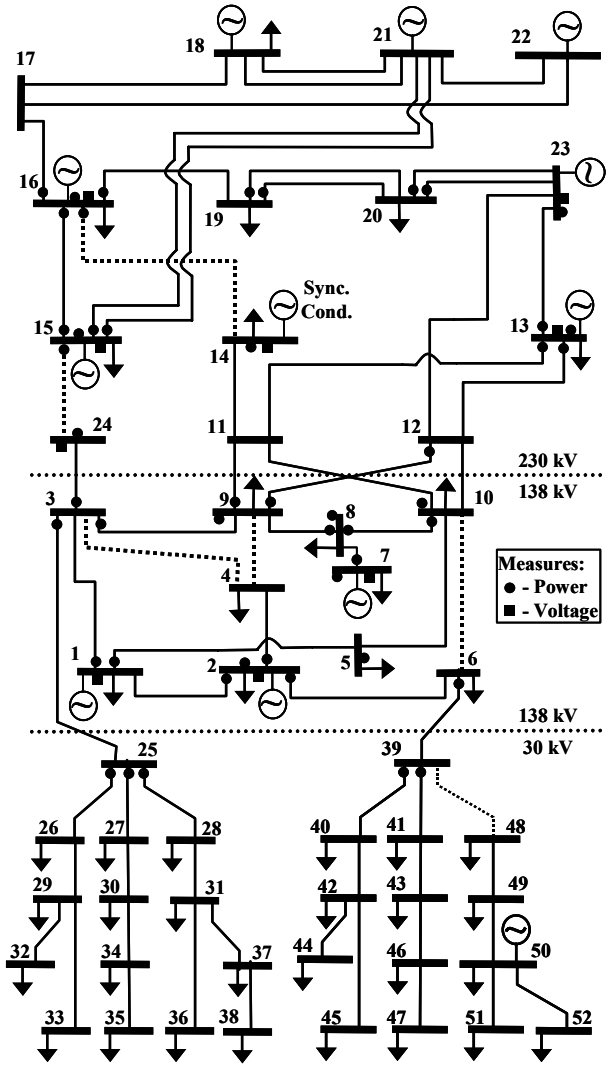

Fig. 2 - Augmented IEEE 24 buses network with a new voltage level (30 kV).

V. Case Study

A. Network data

In this Section, we will illustrate the application of the developed algorithms using a network based in the IEEE 24 bus system [9]. To turn the application more realistic, we added a new voltage level, 30 kV, to represent distribution MV networks. Apart from this, we also added a new branch between buses 3 and 4. The whole network is represented in Figure 2. The 30 kV areas have a radial configuration. This means that buses 3, 24 and 25 represent a substation with three voltage levels (230, 138 and 30 kV). The 30 kV bus has three feeders connected to it. In a similar way, buses 6 and 39 represent another substation with two voltage levels (138 and 30 kV). The 30 kV bus has three feeders connected to it.

In Figure 2 we also represent the available measurement devices. The voltage devices are represented by a black square (buses 1, 2, 3, 6, 7, 13, 15, 16 and 23). We used black circles to represent active and reactive injected power devices (buses 2, 5, 7, 8, 9, 10, 13, 15, 16 and 23). The measurement devices on the branches are also represented by black circles and can measure active and reactive flows.

We also considered a number of zero pseudo-measurements for the voltage phases in buses 1, 2, 7, 13, 15, 16, 18, 21, 22, 23, 50, that is generation buses. As explained in Section III.C, these pseudo measurements give the algorithm the flexibility to adjust the topology in case of splitting problems. In any case, the bus selected for phase reference for the whole network is bus 1. If the network is split it is necessary a phase reference per electrical island. The state estimation algorithm will select these reference buses.

The qualitative information obtained from the system operator was related with generation and voltage in buses 14, 21, 22 and 50. The following propositions are examples of natural language assessments:

- *"The generator on bus 21 produces around 350 MW. This value will not be below 315 nor above 385 MW. This generator consumes around 23 Mvar and this will not be below 20 nor above 25 Mvar" ;*
- *"Buses 21 and 22 have a voltage magnitude around 1.025 p.u., but this value can vary from 0.9225 to 1.1275 p.u.".*

To illustrate the bad data analysis related with erroneous signs, we admitted that the measured active power flows for transformers 3-24, 9-11 and 9-12 were erroneously positive, while for transformer 12-9 the value was correctly positive.

B. Load Allocation Results

As referred before, the load allocation can be viewed as a procedure to add more information helping to turn the network observable. The developed algorithm was used for the loads connected downstream buses 25 and 39.

Fig. 3 details the network downstream bus 39. We admitted there are measured active and reactive flows on lines 39-40 and 39-41 and that the state of line 39-48 is suspicious. This suspicion is inferred from analyzing the measured values in branches 6-39, 39-40 and 39-41. For this network, we ran the load allocation procedure to assign active and reactive nodal values to the buses downstream bus 39. Apart from that, it is important to stress that the active and reactive measurements available for the generator in bus 50 act as an anchor in the load allocation procedure. The parameters needed to run the load allocation and the complete results are described in [8].

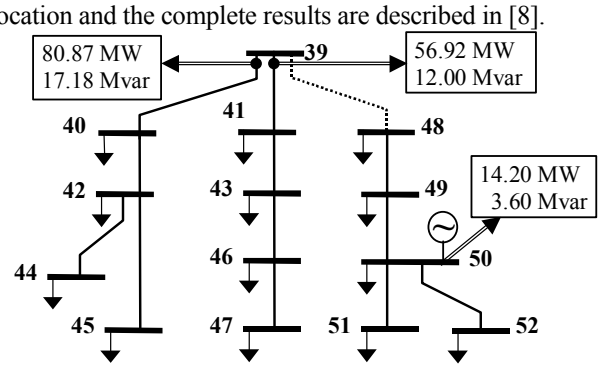

Fig. 3 - Sub-network related with the three feeders connected to the bus 39.

C. Topology Identification

The topology of the network under analysis is not completely known. The status of branches 4-9, 6-10, 14-16 and 15-24 is unknown and one suspect that branches 3-4 and 39-48 have an open status. These suspicious situations are inferred from analyzing the measured values, although the status for these

branches in the Database is closed.

The algorithm converges to the correct solution from the topological point of view in 8 iterations. Branches 4-9, 6-10, 14-16 and 15-24 are assigned a closed status, and branches 3-4 and 39-48 are assigned an opened status. This means that the network is operating with two energized islands with phase reference in bus 1 for the larger one and in bus 50 for the smaller one. The other buses where a phase pseudo--measurement was considered have non-zero phase values, as if these pseudo-measurements were not included.

D. *Fuzzy State Estimation Results*

The algorithm converges to the correct solution in 8 iterations when considering the identification of power flow signs. The active power flow in transformers 3-24, 9-11 and 9-12 was identified as having a negative value, symmetrical regarding the value used as measurement. The state estimation algorithm also gives results for state variables (voltage and phase in each bus), power injections, and branch power flows and current. As a result of the specified uncertainties, the state estimation results are also affected by uncertainty leading to the description of the possible state of the system.

As examples, Fig. 4 and 5 present the estimated membership functions for four variables included in the input data with fuzzy values. Fig. 4 presents the membership functions for the measured voltage magnitude and its result in buses 21 and 22. Fig. 5 shows the membership functions for the measured and the result for the active and reactive power injection in bus 21.

E. *Discussion*

As referred before, the whole algorithm took 8 iterations to converge. Let us now consider two situations. In the first place, let us assume that the topological variables are not included in the model and that the initial status of the unknown and the suspicious branches are in fact known from the beginning. In this case, the algorithm also needs 8 iterations to obtain the same solution for the remaining variables. In the second case, let us assume that the power flows sign identification is not included and that the power flows signs are correct from the beginning. In this case, the state estimation algorithm only needs six iterations to obtain the same solution for the remaining variables.

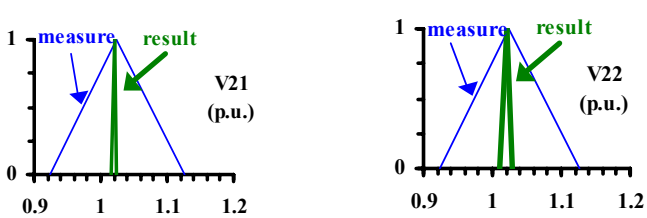

Fig. 4 - Voltage magnitude membership functions on buses 21 and 22.

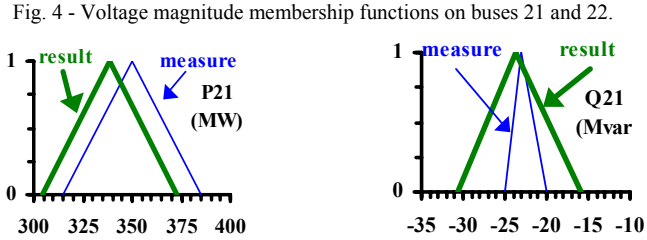

Fig. 5 - Power injection membership functions on bus 21.

The membership functions in Fig. 4, and others obtained as results, deserve some comments. One of the most interesting features of the fuzzy state estimation model is that the specified fuzziness is in some cases larger than the uncertainty resulting from state estimation. This means that state estimation is a way of eliminating incoherencies in data assuming that the power system is running in a steady state.

Differently in Fig. 5, the membership functions obtained in the results are larger than the input ones. This occurs because data from several sources may not take into account the operation features of power systems. The functions in Fig. 5 indicate that the values having membership degree 1.0 do not lead to a coherent operation point in the sense they are not in accordance with Kirchoff laws. The state estimation algorithm corrects this incoherence not only for the initial crisp study, clearly illustrated in these figures (deviation of the central values of the input and computed functions), but it also occurs for the 0.0 level of uncertainty.

VI. Conclusions

The State Estimation global model described in this paper has a large potential of use given that it includes a number of issues, which are typical in distribution networks (topology issues, possibility of splitting and a load allocation module to address the observability problem). The use of fuzzy information can also give a new degree of flexibility to this algorithm leading to a more complete knowledge of the possible behaviour of the system. It should be emphasised that the algorithm is computationally very efficient since, in average, the surplus of execution time when compared with traditional WLS approaches is very small as we estimated an average surplus of 50% computational time compared with a traditional WLS run. This price seems to be reduced when considering the surplus of information regarding the operation of distribution systems, an area where a new effort for automation is certainly required.

References

[1] T. Takagi, M. Sugeno, “Fuzzy Identification of Systems and Its Application to Modeling and Control”, IEEE Trans. on Systems, Man and Cybernetics, Vol. 15, pp. 116-132, Jan 1985.

[2] A. Kaufmann, M. M. Gupta, *Fuzzy Mathematical Models in Engineering and Management Science*, North Holland ed., 1988.

[3] V. Miranda, J. Pereira, J. T. Saraiva, “Load Allocation in DMS with a Fuzzy State Estimator”, IEEE Trans. on PWRS, Vol. 15, No. 2, pp. 529-534, May 2000.

[4] M. B. do Coutto Filho, A. M. Leite da Silva, D. M. Falcão., "Bibliography on power system state estimation (1968-1989)", IEEE Trans. on PWRS, Vol. 5, No.3, Aug. 1990.

[5] C. N. Lu, J. H. Teng, W.-H. E. Liu, "Distribution System State Estimation", Proc. of IEEE/PES 1994 Winter Meeting, New York, 1994.

[6] A. Simões Costa, R. C. Pires, L. Mili, “Iteratively Reweighted Least-Squares State Estimation through Givens Rotations”, IEEE Trans. PWRS, Vol. 14, No. 4, pp. 1499-1507, Nov. 1999.

[7] J. Pereira, V. Miranda, J. T. Saraiva, “Fuzzy Control of State Estimation Robustness”, Proc. of PSCC’02 - 14th Power Systems Computation Conference, Session 37, Paper 5, Sevilla, Spain, June 2002.

[8] J. Pereira, *A State Estimation Approach for Distribution Networks Considering Uncertainties and Switching*, PhD Thesis, FEUP, Porto, July 2001.

[9] IEEE RTS Task Force of APM Subcommittee, “IEEE Reliability Test System”, IEEE PAS, Vol.98, No.6, pp 2047-2054, Nov/Dec. 1979.