Integrated framework for energy loss allocation in electric distribution systems under liberalised energy markets

Paulo M. de Oliveira-de Jesús*
and M. Teresa Ponce de Leão

Faculdade de Engenharia da Universidade do Porto (FEUP),
Electrical and Computer Department,
Instituto de Engenharia de Sistemas e Computadores (INESC Porto),
Dr. Roberto Frias, 378 4200-465 Porto, Portugal
Fax: +351 22 209 4150 E-mail: pdeoliv@fe.up.pt
E-mail: mleao@fe.up.pt
*Corresponding author

Abstract: This paper discusses an integrated framework for cost allocation of energy losses of electric distribution systems under liberalised energy markets. As key contribution is developed an allocation strategy based upon *Locational* and *Uniform* Incremental Prices. The locational incremental prices send efficient economical signals to distributed generators with incentives for loss minimisation and uniform incremental pricing are applied to consumers avoiding non-discriminatory access to the network due to the consumer's geographical localisation. Proposed methodology has been tested and compared with different loss allocation procedures reported in literature under the scope of the social welfare theory in order to assess its impact in the market equilibrium.

Keywords: power loss allocation; energy pricing; distributed generation; deregulation; power system economics.

Reference to this paper should be made as follows: de Oliveira-de Jesús, P.M. and Ponce de Leão, M.T. (2007) 'Integrated framework for energy loss allocation in electric distribution systems under liberalised energy markets', *Int. J. Global Energy Issues*, Vol. x, No. x, pp.xxx–xxx.

Biographical notes: P.M. de Oliveira-de Jesus received the MSc and the Electrical Engineering Degree in 2002 and 1995, respectively, from Universidad Simón Bolívar, Caracas, Venezuela. He is pursuing PhD studies at Faculdade de Engenharia da Universidade do Porto (FEUP) and is working as a researcher at Instituto de Engenharia de Sistemas e Computadores (INESC Porto), Portugal.

M.T. Ponce de Leão received her degree and PhD Degree from Faculdade de Engenharia da Universidade do Porto (FEUP) in 1980 and 1996, respectively. Currently, she is Professor in the Electrical and Computer Department of FEUP. Since 1987, she has joined Instituto de Engenharia de Sistemas e Computadores (INESC Porto) as a researcher. In recent years, she was involved in the development of DMS systems and in the evaluation of impact of Distributed Generation (DG) in distribution planning.

1 Introduction

Under ongoing restructuring process, Transmission and Distribution (T&D) utilities are submerged in deep changes. Traditional regulatory schemes based on Cost of Service/Rate of Return (CoS/RoR) have been substituted by new regulatory frameworks based on Performance-Based Ratemaking (PBR) that are developed to encourage economic efficiency, proposing an open and non-discriminatory use of network infrastructure (Rothwell and Gomez, 2003).

The CoS/RoR regulation assures recovery of all costs of the network provider but no more. The profit of the monopolist is recognised by the regulator by way of a reasonable rate of return of the invested capital. It is well known that perfect CoS/RoR regulation is able to hold access-prices down to long-term costs, but has the perverse effect of non-transmitting incentive to minimise cost in the operation and planning (Stoft, 2002). Alternatively, under PBR regulation, T&D business remains regulated as a natural monopoly, but some directives have been introduced in order to

- hold access-price near to marginal cost
- provide full-powered incentives to minimise total costs.

However, it is not easy to fulfil with both objectives simultaneously (Rothwell and Gomez, 2003). A price-cap or revenue-cap approach sets a cap with a given formula that takes into account inflation and performance. Thus, with an access-price cap, monopolist is encouraged to minimise costs in order to increase profits. However, network access-price must always be higher than long-term costs in order to avoid monopolist bankruptcy (Román et al., 1999).

The current tendency in restructuring process is to implement incentive regulation into T&D business as form of revenue-cap, price-cap or yardstick competition schemes (San Román, 1999). For this reason, the challenge is to develop an adequate and open access-pricing framework to fairly allocate fixed and operational costs in order to send correct economic signals and providing cost minimisation incentives (Marangon Lima et al., 2002; Saraiva et al., 2000).

Unfortunately, the development of an open access policy for distribution systems must take into account an imperfect delivery network that produces energy losses that must be allocated among all distributed generators and consumers ensuring revenue reconciliation of power losses (Ponce de Leão and Saraiva, 2003). Losses are non-linear functions of line flows and it is difficult to define the responsibility of each market agent in global power losses. These facts permit the existence of several and different methodologies for power loss allocation in the literature, mainly in transmission systems.

A lack of information about allocation methods applied to distribution systems is observed. The direct application of transmission-access-pricing methods to the case of large distribution networks has several limitations and does not seem reasonable owing to the complexity to send locational prices to all distribution agents. Traditionally, the power losses at distribution level have been considered as an additional load, and therefore allocated among all consumers using average values at different voltage levels and consumer classes (Saenz et al., 2001). However, it is observed that DG is facing a heavy growth in the recent years (Strbac, 2002), and an important debate has been raised about whether a distributed resource must be charged or rewarded by its contribution in the increase or reduction of system losses (Goméz Expósito et al., 2000). This fact forces

the development of new allocation procedures taking into account the effect of distributed generators in the network.

It is possible to identify at least five differentiated cost allocation philosophies or families: incremental, roll-in-embedded, tracing-based, circuit-based and avoided cost procedures. The guide philosophical principles, as well as the most relevant cost allocation procedures, either in distribution or transmission systems, are listed in Table 1 (de Oliveira-de Jesus and Ponce de Leão, 2005a):

Table 1 Cost loss allocation methodologies

Family	*Procedures*
Roll-in-embedded	Postage stamp (Saraiva et al., 2000; Happ, 1994)
	MW-mile (Saraiva et al., 2000; Shrimohammadi et al., 1996)
Tracing-based	Proportional sharing (Macqueen and Irving, 1996; Bialek, 1996)
Circuit-based	ZBUS (Conejo et al., 2001)
Incremental	Incremental loss factors (Elgerd, 1982; Wood and Wollenberg, 1996; Galiana et al., 2002)
	Reconciled incremental loss factors (Murphy et al., 1994; Mutale et al., 2000; de Oliveira-de Jesus and Ponce de Leão, 2004a; Hatziargyriou et al., 2002)
Avoided cost loss	Postage stamp (Costa and Matos, 2004)
	Proportional sharing (de Oliveira-de Jesus and Ponce de Leão, 2005b)

In the *roll-in-embedded* family, it is found in several different approaches (Saraiva et al., 2000). Some of them as the postage stamp and MW-mile procedures have been widely applied in transmission and distribution systems. The postage stamp approach (Happ, 1994) (also known as *pro rata*) considers that average loss cost is globally assigned to generators and consumers using a given sharing proportion: 50:50% in transmission systems and 100:0% at distribution level (Stoft, 2002; Román et al., 1999). The MW-mile procedure is based on the extent of use of distribution network by all generators and demands (Shrimohammadi et al., 1996).

The *tracing-based* procedure was formerly proposed by Macqueen and Irving (1996) to be applied in distribution systems. Later, a general approach was presented by Bialek (1996). The algorithm attempts to determine the pathway of power flow in the network allowing an assessment of how much energy from a given point goes to another point, determining the contribution of each agent in the power losses. The proportional sharing procedure assumes that power injections are proportionally shared among the outflows of each node of the network. This analysis is made in a branch basis, taking into account the allocation of cross terms of losses. Results always derive in positive charges and it is not possible to allocate losses to producers and loads at same time. Losses are usually allocated using a 50:50% sharing proportion.

The *ZBUS* procedure was proposed by Conejo et al. in order to distribute the system losses in a natural form using the real part of the inverse of admittance matrix (Conejo et al., 2001). It exploits the full set of network equations and does not require any simplifying assumptions. However, this loss distribution is made in a nodal basis, and an additional pro rata assignment is required in order to allocate losses among loads and producers, usually using a 50:50% sharing proportion.

The *Incremental* procedures have been widely applied in power systems in the last four decades (Elgerd, 1982; Wood and Wollenberg, 1996; Galiana et al., 2002). These methods are based on the computation of loss incremental factors – also called marginal loss coefficients – obtained from a converged AC power flow.[1] It is considered that incremental approach yields in an overall efficient economic performance and therefore competitive prices with powerful incentives to loss minimisation. However, some arbitrariness is introduced because of a preliminary definition of the slack or reference node. Also, as result of network non-linearities, these competitive prices must be normalised in order to avoid over-recovery of losses. Non-reconciled incremental loss allocation approach for distribution systems was introduced firstly by Murphy et al. (1994) and later by Mutale et al. (2000) with revenue reconciliation of losses. Some applications can be found in de Oliveira-de Jesus and Ponce de Leão (2004a) and Hatziargyriou et al. (2002).

Finally, *Avoided loss cost* procedures have been proposed based on the allocation of the entire costs to consumers disregarding the influence of distributed sources and reallocating the avoided or added losses among all generators. A first formulation was proposed by Costa et al. using the proportional sharing principle (Costa and Matos, 2004). A generalised formulation was recently proposed in de Oliveira-de Jesus and Ponce de Leão (2005b) based on the postage stamp principle.

Some debate has been arisen around the fairness and arbitrariness of the different cost allocation methodologies. Some studies intend to compare some of these procedures according to the following principles (Lima and Padilha-Feltrin, 2004; Salgado et al., 2004; Conejo et al., 2002):

- consistency with the results of power flow
- dependency on the relative location into the network
- transparency and simplicity
- efficiency in order to provide appropriate economic signals.

The comparison results reveal a high variability. In general, no method fulfils all desirable features, and results must not be considered conclusive. Generally, every allocation procedure has a degree of arbitrariness, and the adequacy or kindness of a given methodology depends on the economical impact in the market equilibrium.

The authors consider that, independently of the arbitrariness or adequacy of a selected allocation scheme, under real-time or day-ahead energy prices, the loss allocation economic policy affects the demand response and therefore the market equilibrium. This issue is not expressly considered in previous comparison studies that consider that ex-post economic signals do not interfere with the technical functioning of the network (Conejo et al., 2002), and therefore load demand is considered inelastic or unresponsive to loss access-prices. Nevertheless, every allocation procedure modifies energy prices in a different way, depending on the philosophy, the market equilibrium is altered as result of the price elasticity of demand (Kirschen, 2000, 2003) and some form of cross-subsidies appears among market agents affecting economic variables as the net Social Welfare (SW) and Network Remuneration (NR) (de Oliveira-de Jesus and Ponce de Leão, 2005a). Taking into account these premises, distribution real-time access-pricing design under PBR regulation (yardstick competition, revenue or price cap) must take into account the effect of price elasticity of demand (de Oliveira-de Jesus and

Ponce de Leão, 2004b). The authors consider that computation of LIPs is an adequate way to send efficient economic signals to distributed generators connected at distribution level, but LIPs must not be applied to all consumer classes.[2]

This paper discusses an integrated framework for the allocation of energy losses of electric distribution networks. Energy losses are distributed among distributed producers using a pricing policy based on LIPs adequate to send efficient economical signals to distributed promoters with full-powered incentives for power loss minimisation (Murphy et al., 1994). At demand-side, energy losses are allocated among consumers by means of Uniform Incremental Prices (UIPs), avoiding non-discriminatory access to the network (de Oliveira-de Jesus and Ponce de Leão, 2005c). Electrical variables of most distributed generators (as large wind farms and cogeneration plants) can be monitored in real-time. In consequence, proposed framework is suitable to be supported on online platform in order to send economical signals for loss reduction depending on geographical localisation.

Finally, with the aim of verifying the adequacy of the proposed methodology, a comparative study was performed with various loss allocation procedures under the scope of the social welfare theory in order to assess the impact of proposed allocation procedure in the market equilibrium (de Oliveira-de Jesus and Ponce de Leão, 2005a). The methodology has been tested in a real 28-bus distribution system with two distributed producers.

2 Proposed economic framework for energy loss allocation

A loss allocation methodology consists on subdividing the distribution losses into fractions. The cost of losses must be distributed among all market agents connected to the distribution network. Individual market agents as distributed generators have an important impact in the technical performance requiring individual supervision, because of their ability to produce or avoid power losses in the system affecting service quality. In consequence, as showed in the marginal pricing strategy proposed by (Mutale et al., 2000), it seems to be appropriate to send individual price signals in order to achieve economic efficiency. However, unlike transmission systems, distribution consumers must not be treated as nodal transactions, because they are dispersed into the grid as form of different customer classes (residential, industrial, commercial, etc.), and discriminatory claims could be invoked by end-users.

In this paper, consumer classes are connected at distribution voltage level and losses are related only to heating in lines and transformers at different distribution voltage levels. Losses at low-voltage networks (secondary systems) are not expressly considered.

The worldwide practice based on the application of uniform prices to class consumers (instead of locational prices) remains a realistic solution. In this contribution, locational marginal pricing strategy introduced by (Mutale et al., 2000) is modified at demand-side in order to introduce the *uniform marginal pricing* model proposed by (de Oliveira-de Jesus et al., 2005).

The proposed access-price framework is shown in the Figure 1. For each consumer and producer, it is necessary to apply a specific charge η in the energy cost in order to cover the cost of active losses.

Figure 1 Proposed cost loss allocation methodology

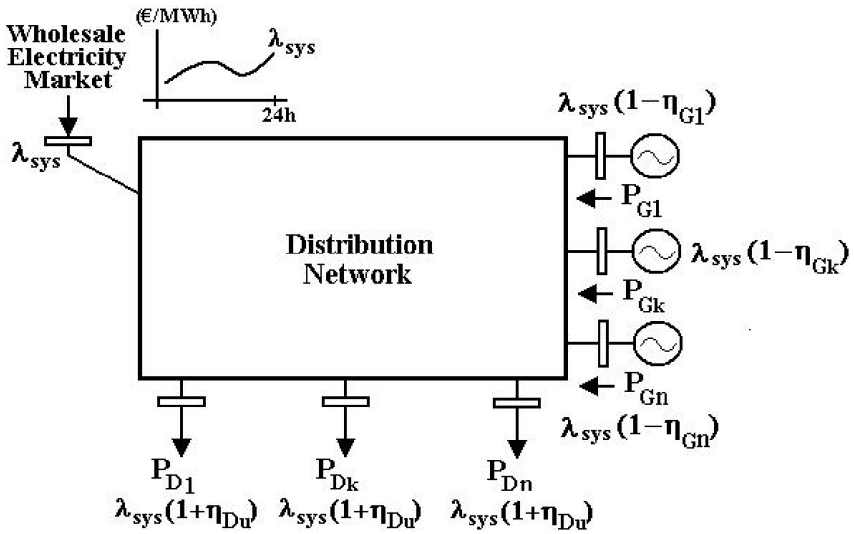

An interconnection node links distribution and transmission systems where energy is exchanged between all market agents. No market agent is associated to the interconnection node and for that reason this node must be considered as a reference or slack bus where no loss compensation is made. The power exchanged at interconnection node is paid or bought at the spot price in the wholesale electricity market, commonly defined as hourly market clearing system price λ_{sys}.

Charges and losses allocated to generators

For each generation node k, Locational Incremental Prices (LIP_{Gk}) are computed as a function of the incremental loss coefficients η_{Gk} and the market system price:

$$\mathrm{LIP}_{Gk} = \lambda_{\mathrm{sys}}(1-\eta_{Gk}) \quad k = 1,\ldots,n. \tag{1}$$

Incremental loss coefficients measure the change in power losses owing to the incremental change in power injections in each bus of the network. Losses allocated to generators are calculated in (MW) as $L_{Gk} = \eta_{Gk} P_{Gk}$ and can derive in positive or negative values:

- When $\eta_{Gk} < 0 \rightarrow L_{Gk} < 0$ and then $\mathrm{LIP}_{Gk} > \lambda_{sys}$

  Generator k is allocated with negative losses and compensated for decreasing the total system power losses through a locational price greater than system price.

- When $\eta_{Gk} > 0 \rightarrow L_{Gk} > 0$ and then $\mathrm{LIP}_{Gk} < \lambda_{\mathrm{sys}}$

  Generator k is allocated with positive losses. Producer is charged for increasing the total system power losses through a locational price lower than system price.

Charges and losses allocated to loads

All consumption nodes are charged using Uniform Incremental Prices (UIP_D) computed as function of a uniform loss coefficient η_{Du} and the market system price:

$$\mathrm{UIP}_D = \lambda_{\mathrm{sys}}(1 + \eta_{Du}). \tag{2}$$

Losses allocated to demands are calculated in (MW) as $L_{Dk} = -\eta_{Du}P_{Dk}$ and generally derive in positive values. Mathematical formulation required to compute locational and uniform loss coefficients is explained in detail in the appendix.

Implementation

As proposed in (Murphy et al., 1994), technology state-of-art makes possible the application of incremental loss pricing in real-time basis (online) using available data from SCADA (Khodr et al., 2002) or by means of distribution state estimation (Miranda et al., 2000).

3 Application example and comparison with other different methodologies

The proposed methodology, based on locational (LIP) and uniform (UIP) incremental access-pricing, was applied to a real 15 kV-level Portuguese distribution network (Figure 2) with two 15 MW-rated wind farms. Proposed loss allocation scheme has been compared with the following methodologies:

- full locational-nodal incremental loss factors (ILF), Mutale et al. (2000)
- circuit-based ZBUS matrix, Conejo et al. (2001)
- pro rata or postage stamp, Happ (1994)
- pro rata modified, Saraiva et al. (2000)
- power flow-based MW-mile, Shrimohammadi et al. (1996)
- power flow-based MW-mile modified, Shrimohammadi et al. (1996)
- proportional Sharing, Bialek (1996)
- avoided Pro Rata (Avoided PR), de Oliveira-de Jesus and Ponce de Leão (2005b)
- avoided Proportional Sharing (Avoided PS), Costa and Matos (2004).

A brief description of each methodology can be found in de Oliveira-de Jesus and Ponce de Leão (2005a).

Energy is purchased at wholesale market at market clearing price, preset in λ_{sys} = 30 \$/MWh = 0.03 \$/kWh. Market regulation imposes that energy injected by the wind farms (generators 27 and 28) are remunerated at the same clearing market price λ_{sys}. Consumption pattern at nodes and network characteristics can be found in (de Oliveira-de Jesus and Ponce de Leão, 2005c) or requested to the authors. The study was performed at peak load scenario when total load demand was 15.5 MW. Wind farms 1 and 2 are operating at 20% and 30% of nominal capacity. At peak load scenario, energy losses are 487.45 kWh.

Figure 2 28-bus distribution test system with two wind farms

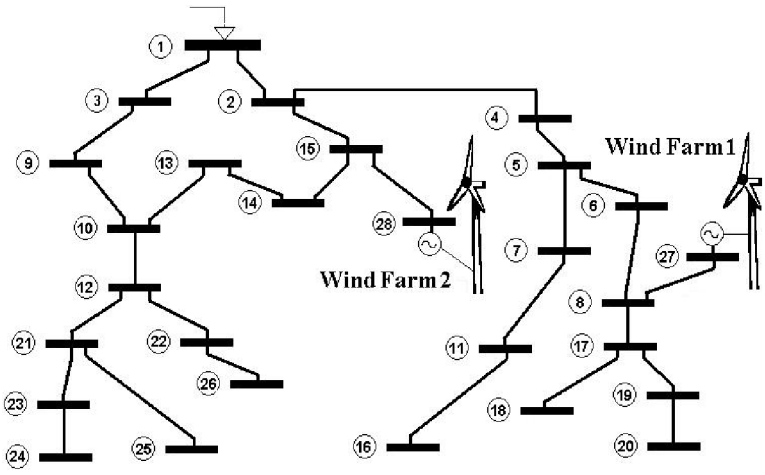

Applying the proposed methodology, the UIP applied to all consumers is $UIP_D = 0.03097$ \$/kWh where $\eta_{Du} = 0.0324$. Prices applied to both generators are $LIP_{G27} = 0.03046$ \$/kWh where $\eta_{G27} = -0.01552$ and $LIP_{G28} = 0.02979$ \$/kWh where $\eta_{G28} = 0.00698$. The results indicate that wind farm 1 must receive compensation owing to avoided losses and wind farm 2 must pay owing to increase of losses. Also, all loads are charged with a uniform price.

In Table 2, we present a comparative analysis of the power losses (L_{Dk} and L_{Gk}) allocated to all loads and the two wind farms. We present the results obtained using the proposed methodology and the nine compared methodologies.

From the analysis of the results, we can say that all methodologies ensure revenue reconciliation of losses. Roll-in-embedded and tracing-based procedures assign positive losses among consumers and producers in a 50:50% proportion, and ZBUS method allocates power losses in a similar way, 55:45%. Under both avoided cost procedures, consumers are charged with very high losses and producers are rewarded with negative losses in a 256:–56% proportion.

The proposed methodology does not change the overall performance of the full incremental approach (ILF). It is verified that consumers are charged with positive losses and producers are slightly rewarded with negative losses in a 103:3% proportion.

Figure 3 shows the percentage of total losses allocated to loads, calculated as $100\% x L_{Gk}/L$ and $100\% x L_{Dk}/L$. The proposed approach yields in less volatile charges to consumers with respect to the full incremental approach (ILF). Avoided cost procedures (avoided pro rata and avoided proportional sharing) produce the highest volatile charges. For instance, load 20 is charged with more than 25% of total power losses. Less volatile behaviour is observed under tracing-based (PS) and Roll-in-embedded procedures (PR, PR Modified, MW-mile, MW 2-mile).

Table 2 Energy losses allocated to loads and generators using the proposed methodology and nine compared loss allocation procedures[3]

	Power losses allocated by cost loss allocation procedure (kWh)									
	Incremental loss								*Avoided*	
Bus	*Proposed*	*Nodal*	Z_{bus}	*Pro rata*	*Pro rata modified*	*MW-mile*	*MW²-mile*	*Proporional sharing*	*Pro rata*	*PS*
Load 2	11.36	2.03	–2.38	5.50	2.87	1.78	0.59	1.27	28.22	9.29
Load 3	22.72	8.73	–1.20	11.01	11.48	3.89	2.39	4.19	56.44	12.23
Load 4	22.72	12.06	2.76	11.01	11.48	5.66	5.15	6.09	56.44	43.32
Load 5	18.18	14.67	6.08	8.81	7.34	6.22	5.14	6.38	45.15	53.77
Load 6	5.84	4.43	1.68	2.83	0.76	2.51	0.71	1.46	14.51	19.21
Load 7	19.47	19.84	10.98	9.43	8.43	8.46	8.00	8.80	48.38	62.68
Load 8	21.10	14.54	4.14	10.22	9.90	10.84	11.36	4.25	52.41	77.22
Load 9	21.10	14.50	4.84	10.22	9.90	6.05	3.61	6.81	52.41	20.77
Load 10	25.97	21.71	9.30	12.58	14.99	8.84	6.82	12.02	64.51	31.94
Load 11	29.21	34.46	19.14	14.15	18.97	15.34	22.60	15.36	72.57	99.64
Load 12	14.61	17.66	10.69	7.08	4.74	6.39	3.38	9.53	36.28	23.70
Load 13	19.47	13.58	4.50	9.43	8.43	7.00	4.04	9.51	48.38	28.87
Load 14	19.47	10.09	1.73	9.43	8.43	6.56	3.74	7.67	48.38	27.65
Load 15	27.59	2.51	–6.93	13.37	16.92	7.29	5.76	4.25	68.54	30.73
Load 16	27.59	33.94	19.64	13.37	16.92	16.96	24.18	15.15	68.54	95.78

Table 2 Energy losses allocated to loads and generators using the proposed methodology and nine compared loss allocation procedures[3] (continued)

	Power losses allocated by cost loss allocation procedure (kWh)									
	Incremental loss								*Avoided*	
Bus	*Proposed*	*Nodal*	Z_{bus}	*Pro rata*	*Pro rata modified*	*MW-mile*	*MW²-mile*	*Proporional sharing*	*Pro rata*	*PS*
Load 17	14.61	14.19	6.54	7.08	4.74	8.94	6.75	4.97	36.28	59.31
Load 18	19.47	21.53	11.72	9.43	8.43	13.67	14.03	7.94	48.38	82.88
Load 19	25.97	36.84	23.93	12.58	14.99	18.45	25.57	14.58	64.51	122.17
Load 20	29.21	45.44	29.87	14.15	18.97	23.39	36.93	18.32	72.57	143.06
Load 21	11.36	15.40	9.94	5.50	2.87	6.02	2.75	8.23	28.22	20.13
Load 22	20.45	26.95	17.39	9.91	9.30	10.79	8.85	14.52	50.80	35.62
Load 23	24.34	40.51	27.99	11.79	13.17	15.19	15.99	21.24	60.47	50.60
Load 24	18.18	31.37	22.54	8.81	7.34	13.00	10.69	16.43	45.15	38.97
Load 25	14.61	20.76	13.91	7.08	4.74	9.04	5.66	11.10	36.28	26.95
Load 26	18.50	25.36	16.66	8.96	7.61	11.42	9.04	13.64	45.96	33.26
Total loads	*503.10*	*503.10*	*265.43*	*243.73*	*243.73*	*243.73*	*243.73*	*243.73*	*1249.78*	*1249.78*
Generator 27	–48.10	–48.10	55.06	121.86	121.86	151.74	169.09	107.98	–381.17	–337.76
Generator 28	32.45	32.45	166.96	121.86	121.86	91.99	74.64	135.74	–381.17	–424.58
Total generators	*–15.65*	*–15.65*	*222.02*	*243.73*	*243.73*	*243.73*	*243.73*	*243.73*	*–762.33*	*–762.33*
Total losses	*487.45*	*487.45*	*487.45*	*487.45*	*487.45*	*487.45*	*487.45*	*487.45*	*487.45*	*487.45*

Figure 3 Energy losses allocated to loads using the proposed methodology and nine compared loss allocation procedures[4]

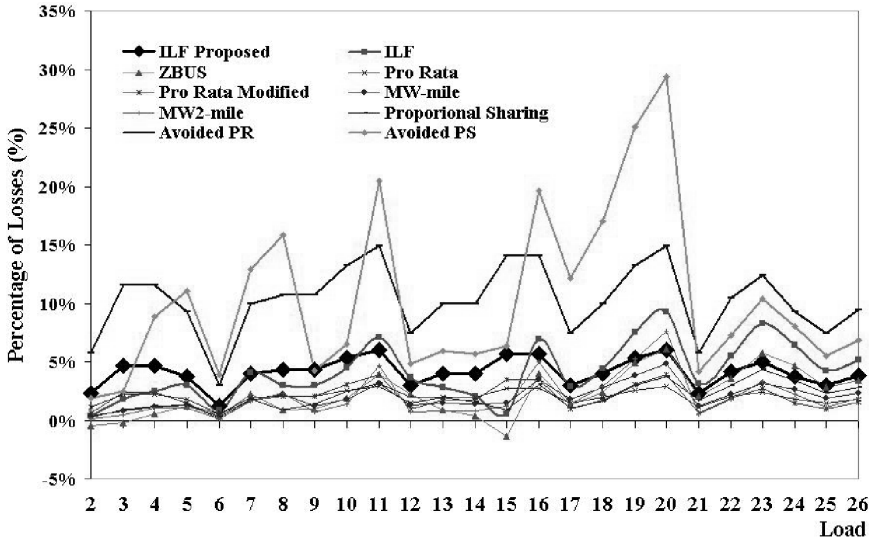

On the other hand, as seen in Figure 4, proposed methodology produces the same results than ILF methodology. It is owing to the locational prices obtained to ILF procedure being the same than the proposed methodology. Also, avoided cost procedures assigns negative losses to generators behaving in a similar way than incremental procedures.

Figure 4 Energy losses allocated to generators using the proposed methodology and nine compared loss allocation procedures[5]

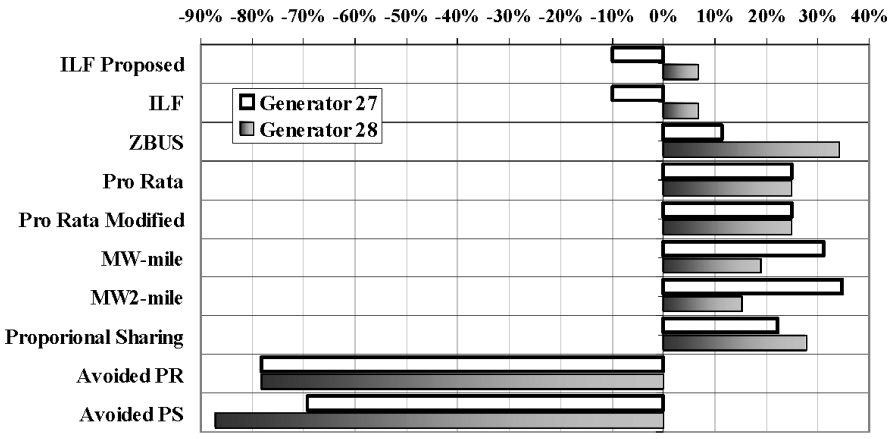

It is observed that under avoided cost approach, generators could be rewarded with negative losses, approximately 90% of total power losses. Under roll-in-embedded, ZBUS and tracing-based approaches, all charges are positive. This means that both generators are charged with losses. The proposed approach and the full incremental approach (ILF) assign negative losses to generator 27 and positive losses to generator 28, taking into account the effect in power losses because of the localisation into the network.

The key differences traducing the added value introduced by the proposed method can be summarised as follows:

- it is capable to send to the distributed generators, the same locational incremental signals than the full incremental approach proposed by Mutale et al. (2000)
- it is able to send to loads, a uniform incremental signal with less volatile behaviour than the full incremental approach and other methods based on avoided cost strategy
- uniform incremental access-pricing applied to distribution consumers in place of locational incremental access-pricing is consistent with current practices implemented by regulatory boards worldwide, usually based on postage stamp or pro rata approaches, but with additional incentive signals related to power losses reduction.

4 Proposed methodology evaluation under an efficient energy market environment

4.1 Social welfare analysis

The key point to take into account in the design of a real-time access-pricing policy is that load demands must have some responsiveness with respect to energy prices. When a loss allocation policy is applied, owing to the elasticity of demand, the market equilibrium point is altered affecting economic variables as the NR and the social welfare.

With the aim of verifying the adequacy of the proposed methodology, a comparative study was performed by means of the social welfare analysis proposed in de Oliveira-de Jesus and Ponce de Leão (2005a) using the nine compared allocation procedures. Social welfare analysis is detailed as follows:

For each procedure *i,* new prices could be computed and applied to consumers and producers using the following expressions:

$$\rho_{Dk}^{i} = \lambda_{\text{syst}}(1 + K_{Dk}^{i}) \quad \rho_{Gk}^{i} = \lambda_{\text{syst}}(1 - K_{Gk}^{i}) \quad k = 1,\ldots,n;\ i = 0,\ldots,9. \tag{3}$$

where λ_{syst} is the system market price. Power losses allocated (L_{Gk}^{i} and L_{Dk}^{i}) and loss allocation factors (K_{Gk}^{i} and K_{Dk}^{i}) for each allocation procedure are presented in Table 3.

Derivation of loss allocation factors by each procedure can be reviewed in detail in de Oliveira-de Jesus and Ponce de Leão (2005a). In Table 3, positive losses mean that a market agent (producer or consumer) must be charged owing to the increase of losses. Conversely, negative charges mean that a market agent must be compensated owing to the avoided losses.

Table 3 Power losses allocated and loss allocation factors

Procedure	*i*	L_{Dk}	L_{Gk}	K_{Dk}	K_{Gk}
ILF	0	$-\eta_k P_{Dk}$	$\eta_k P_{Gk}$	$-\eta_k$	η_k
LIP and UIP	1	$-\eta_{Du} P_{Dk}$	$\eta_{Gk} P_{Gk}$	$-\eta_{Du}$	η_{Gk}
ZBUS	2	$\frac{P_{Dk}}{P_{Gk}+P_{Dk}} L_k$	$\left(1-\frac{P_{Dk}}{P_{Gk}+P_{Dk}}\right) L_k$	$\frac{L_k}{P_{Gk}+P_{Dk}}$	$\left(1-\frac{P_{Dk}}{P_{Gk}+P_{Dk}}\right)\frac{L_k}{P_{Gk}}$
PR	3	$\frac{0.5LP_{Dk}}{\sum_{i=1}^{n} P_{Dk}}$	$\frac{0.5LP_{Gk}}{\sum_{i=1}^{n} P_{Gk}}$	$\frac{0.5L}{\sum_{i=1}^{n} P_{Dk}}$	$\frac{0.5L}{\sum_{i=1}^{n} P_{Gk}}$
PR modified	5	$\frac{0.5LP_{Dk}^2}{\sum_{i=1}^{n} P_{Dk}^2}$	$\frac{0.5LP_{Gk}^2}{\sum_{i=1}^{n} P_{Gk}^2}$	$\frac{0.5L}{\sum_{i=1}^{n} P_{Dk}^2}$	$\frac{0.5L}{\sum_{i=1}^{n} P_{Gk}^2}$
MW-mile	5	$L\frac{T_{Dk}}{\sum_{j=1}^{m} T_{Dj}}$	$L\frac{T_{Gk}}{\sum_{j=1}^{m} T_{Gj}}$	$\frac{L}{P_{Dk}}\frac{T_{Dk}}{\sum_{j=1}^{m} T_{Dj}}$	$\frac{L}{P_{Gk}}\frac{T_{Gk}}{\sum_{j=1}^{m} T_{Gj}}$
MW-mile^2	6	$L\frac{T_{Dk}^2}{\sum_{j=1}^{m} T_{Dj}^2}$	$L\frac{T_{Gk}^2}{\sum_{j=1}^{m} T_{Gj}^2}$	$\frac{L}{P_{Dk}}\frac{T_{Dk}^2}{\sum_{j=1}^{m} T_{Dj}^2}$	$\frac{L}{P_{Gk}}\frac{T_{Gk}^2}{\sum_{j=1}^{m} T_{Gj}^2}$
PS	7	$\frac{(P_{Dk}^{\text{gross}}-P_{Dk})}{2}$	$\frac{(P_{Gk}^{\text{gross}}-P_{Gk})}{2}$	$\frac{(P_{Dk}^{\text{gross}}-P_{Dk})}{2P_{Dk}}$	$\frac{(P_{Gk}^{\text{gross}}-P_{Gk})}{2P_{Gk}}$
Avoided PR	8	$\frac{LP_{Dk}}{\sum_{k=1}^{n} P_{Dk}}$	$\frac{L^{\text{avoid}}P_{Gk}}{\sum_{k=1}^{n} P_{Gk}}$	$\frac{L}{\sum_{k=1}^{n} P_{Dk}}$	$\frac{L^{\text{avoid}}}{\sum_{k=1}^{n} P_{Gk}}$
Avoided PS	9	$(P_{Dk}^{\text{gross}}-P_{Dk})$	$L^{\text{avoid}}\frac{(P_{Gk}^{\text{gross}}-P_{Gk})}{P_{Gk}}$	$\frac{(P_{Gk}^{\text{gross}}-P_{Dk})}{P_{Dk}}$	$\frac{(P_{Gk}^{\text{gross}}-P_{Gk})}{P_{Gk}}$

η_k: Locational ILF for active power at node *k*.
P_{Dk} P_{Gk}: Load and generation demand at node *k*.
η_{Gk}: Locational ILF for active power generation (LIP_{Gk}).
η_{Du}: Uniform ILF for active power load (UIP_D).
L_k Power losses allocated to bus k using ZBUS method.
L: Power losses.
L^{avoid}: Avoided power losses.
T_{Dk}, T_{Gk}: Extent of the use of the network owing to demand and generator *k*.
P_{Dk}^{gross}: Load gross flow at node k.
P_{Gk}^{gross}: Generation gross flow at node *k*.
m, *n*: number of branches and nodes.

Considering a base scenario provided by a ITL approach $(\rho_{Dk}^{o}, P_{Dk}^{o})$, the new prices produce an elastic response at demand-side, as seen in Figure 5, reaching a new consumption level given by the following linear function:[6]

$$P_{Dk}^{i} = \frac{c_k}{d_k} - \frac{1}{d_k}\rho_{Dk}^{i} \quad k = 1,\ldots,n;\ i = 1,\ldots,9 \tag{4}$$

where c_k is the maximum price willing to pay by load k and d_k is the slope of demand curve obtained form specified price elasticity of demand ε_{Dk} at base operation point (Nicholson, 1997).

$$\varepsilon_{Dk} = \frac{\Delta P_D / P_{Dk}^{0}}{\Delta\rho / \rho_{Dk}^{0}} = \frac{1}{d_k} \cdot \frac{\rho_{Dk}^{0}}{P_{Dk}^{0}} \quad k = 1,\ldots,n. \tag{5}$$

Figure 5 Base scenario and loss allocation operation points

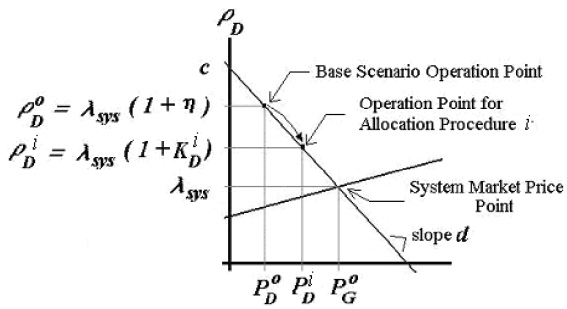

Subsequently, a power flow must be performed in order to obtain the power losses incurred in the system owing to changes at demand side produced by each allocation method.

In agreement with the economic theory (Nicholson, 1997), the Social Welfare level (SW) is computed at base scenario and all new equilibrium points as the sum of producer surplus and consumer surplus follows:

$$SW^{i} = \overbrace{\sum_{k=1}^{n}\left[\underbrace{B_k(P_{Dk}^{i})}_{\text{benefits}} - \underbrace{\rho_{Dk}^{i}P_{Dk}^{i}}_{\text{Expenses}}\right]}^{\text{CONSUMER SURPLUS}} + \overbrace{\sum_{k=1}^{n}\left[\underbrace{\rho_{Gk}^{i}P_{Gk}^{i}}_{\text{Revenues}} - \underbrace{C_k(P_{Gk}^{i})}_{\text{Costs}}\right]}^{\text{PRODUCER SURPLUS}} \quad i = 1,\ldots,9. \tag{6}$$

Variable production costs in each bus k are expressed in a quadratic form

$$C_k(P_{Gk}) = a_k P_{Gk} + b_k P_{Gk}^2 \quad k = 1,\ldots,n. \tag{7}$$

Consumer benefit is obtained from a linear demand curve given in equation (41) applying the general definition (Macqueen and Irving, 1996):

$$B_k(P_{Dk}) = \int \rho_{Dk}(P_{Dk}) \cdot dP_{Dk} = c_k P_{Dk} - \frac{1}{2d_k}P_{Dk}^2 \quad k = 1,\ldots,n. \tag{8}$$

Also, the NR is computed as the difference between the revenues and expenses:

$$NR^{i} = \underbrace{\sum_{k=1}^{n}\rho_{Di}^{i}P_{Di}^{i}}_{\text{Revenues}} - \underbrace{\sum_{k=1}^{n}\rho_{Gi}^{i}P_{Gi}^{i}}_{\text{Expenses}}. \tag{9}$$

The evaluation method is a one-round analysis because the power injections remain unaltered. Generators are dependent on wind availability and can not change their profile when uniform prices are communicated to consumers.

4.2 Evaluation results

In order to perform the social welfare study using the results associated to the test system presented in Figure 2, it is considered that marginal cost of wind energy in wind farms are equal to zero. At equilibrium point, total active and reactive demands are 15.5 MW and 4.6 MVAr respectively. Wind farms 1 and 2 are operating at 20% and 30% of nominal capacity. All loads have price elasticity equal to –0.5. This means that in all buses, a 20% reduction of the energy price will cause a demand increase of 10%.

Table 4 shows the results of the Social Welfare level (SW), the producer and consumer surplus obtained using the proposed methodology and the nine compared procedures.

Table 4 Social Welfare level, the producer and consumer surplus

Loss allocation procedure	*Producer* ($/h)			*Consumer* ($/h)			*Social Welfare*
	Revenues	*Costs*	*Surplus*	*Expenses*	*Benefits*	*Surplus*	
ILF proposed	480.14	200.67	279.47	480.04	960.16	480.12	759.59
ILF	480.09	200.62	279.47	480.09	960.19	480.09	759.56
ZBUS	476.63	204.30	272.34	476.47	963.72	487.25	759.59
Pro rata	476.36	204.67	271.69	476.09	964.02	487.93	759.62
Pro rata modified	476.36	204.67	271.69	476.09	964.02	487.93	759.62
MW-mile	476.34	204.65	271.69	476.12	964.03	487.92	759.60
MW^2-mile	476.34	204.65	271.69	476.12	964.03	487.92	759.61
Proportional sharing	476.34	204.65	271.69	476.12	964.04	487.91	759.60
Avoided PR	491.04	189.17	301.87	490.72	948.70	457.98	759.85
Avoided PS	491.01	189.14	301.87	490.47	948.57	458.11	759.98

As distributed producer costs are equal to zero, the producer costs presented in Table 4 correspond to the cost of purchase energy in the interconnection node (bus 1) at the market system price.

Table 5 shows the NR, expenses and revenues obtained using the proposed methodology and the nine compared procedures.

Under energy markets with elastic response at demand-side, it is observed that the application of all allocation procedures derives an under-recovery of power losses (negative network remuneration). The best performance is achieved with the full incremental approach (ILF) that ensures revenue reconciliation of losses (0 cts$/h). The second best result is obtained using the proposed methodology (–9 cts$/h) and the worst under Avoided PS approach (–54 cts$/h). In Figure 6, it is seen that the social welfare is very flat, except the Avoided PR and Avoided PS approaches that produces a considerable increase in the social welfare level.

Table 5 Network Remuneration, expenses and revenues

Loss allocation procedure	*Distribution network* ($/h)		
	Expenses	*Revenues*	*Renumeration*
ILF proposed	480.14	480.04	–0.09
ILF	480.09	480.09	0.00
ZBUS	476.63	476.47	–0.16
Pro rata	476.36	476.09	–0.27
Pro rata modified	476.36	476.09	–0.27
MW-mile	476.34	476.12	–0.22
MW^2-mile	476.34	476.12	–0.22
Proportional sharing	476.34	476.12	–0.22
Avoided PR	491.04	490.72	–0.32
Avoided PS	491.01	490.47	–0.54

Figure 6 Network Remuneration (NR) and Social Welfare level

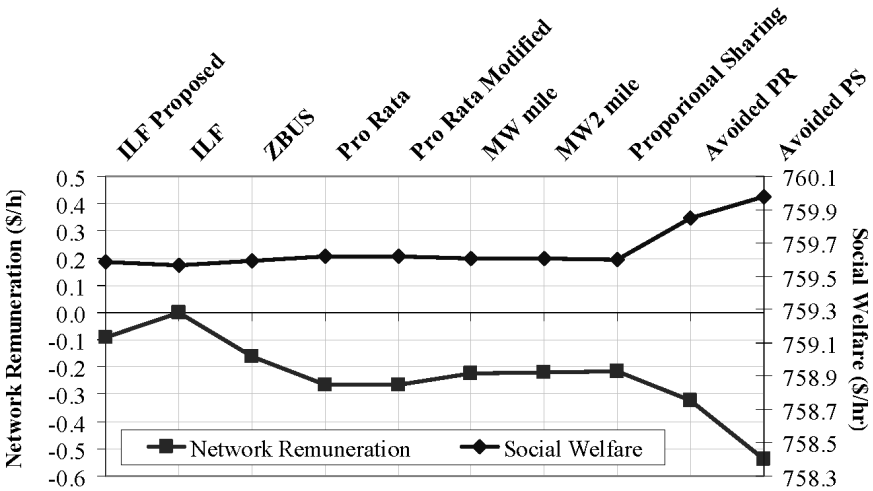

However, an under-recovery of losses condition means that the distribution network provider has important economic losses that reflect in a fake increase of the social welfare. In agreement with the economic theory, social welfare function (equation (5)) is a measure of social benefit, considering only producers and consumers as market agents. In this expression, the distribution provider is not expressly included as a market agent because as a monopolist, his marginal remuneration must be equal to zero.

The profit of the network provider is recognised by the regulatory board by way of a reasonable rate of return of invested capital. No earnings or expenses owing to power losses must be admitted. In this sense, every loss allocation procedure must assure NR close to zero in order to avoid cross subsidising condition among the agents and guarantee revenue reconciliation of losses.

The social welfare analysis demonstrates that a full incremental approach based on LIPs (ILF) yields in a solution that ensures revenue reconciliation of losses. However, as locational prices at demand-side may be hard to implement in the real world the proposed methodology based on locational prices to producers (LIP) and uniform prices (UIP) to loads derives in the second best solution. In addition, as previously demonstrated in de Oliveira-de Jesus and Ponce de Leão (2005a), other allocation procedures based on 50:50% sharing proportion lead in higher under-recovery conditions sending wrong economical signals to the market for cost-loss minimisation.

5 Conclusions

This paper introduces an integrated framework for the allocation of energy losses of electric distribution systems under a liberalised environment. Proposal is based upon Locational and Uniform Incremental Prices. Results have been compared with different loss allocation procedures under the scope of the social welfare theory in order to assess its impact in the market equilibrium. The key features introduced by the proposed method can be summarised as follows.

- Energy losses are allocated among distributed generators by means of LIPs. In consequence, these generators are charged or rewarded by its impact in the increase or decrease of energy losses.
- Energy losses are allocated among consumers by means of a UIP with less volatile behaviour than the full incremental allocation approach and the avoided cost methods.
- Uniform incremental pricing applied to distribution consumers instead of locational incremental pricing is consistent with current allocation procedures (i.e., pro rata).
- The social welfare analysis demonstrates that a full incremental approach based on Locational Incremental Factors (ILF) derives in the best solution that ensures revenue reconciliation of losses. However, a direct application of a full incremental allocation methodology to the case of large distribution networks does not seem practical owing to the complexity to send locational prices to all consumers.
- The proposed methodology becomes the second best solution, because it presents the same social welfare level with a slight under-recovery of losses condition. Other allocation procedures as roll-in-embedded, ZBUS and tracing-based approaches yield on important under-recovery conditions for the distribution utility.

The proposed approach is also suitable for further studies and developments, taking into account the localisation of new agents (modelling industrial consumers as new agents), voltage and penetration level and costs related to the reactive provision of distributed generators and the effect of the economic policy in the quality of supply. Essentially, active marginal prices applied to non-dispatchable distributed generators (as renewable producers) and big consumers lead to an efficient management of reactive power by each resource in order to improve revenues with powerful incentives for cost loss minimisation.

The impact of economics at end-user is related to the benefits of DG to avoid power losses. Actually, losses are entirely paid by final consumers and distributed generators are free to inject active power without payment or compensation. Under a liberalised market scenario, an efficient allocation policy that considers the effect of each producer into global losses should reduce the social cost produced by the Joule effect in all lines of the system.

Acknowledgement

This work was supported by the Fundação para a Ciência e a Tecnologia Portugal Grant FCT-SFRH/BD8410/2002 and Value of Non-Utility Project VENUS/POCTI/ESE/47883/2002.

References

Bialek, J.W. (1996) 'Tracing the flow of electricity', *IEE Proc. Gener., Transm., and Distrib.*, Vol. 143, July, pp.310–320.

Conejo, A.J., Arroyo, J.M., Alguacil, N. and Guijarro, A.L. (2002) 'Transmission loss allocation: a comparison of different practical algorithms', *IEEE Trans. Power Systems*, Vol. 17, No. 3, August, pp.571–576.

Conejo, A.J., Galiana, F.D. and Kockar, I. (2001) 'Z-bus loss allocation', *IEEE Trans. Power Systems*, Vol. 16, No. 1, February, pp.105–110.

Costa, P.M. and Matos, M. (2004) 'Loss allocation in distribution network with embedded generation', *IEEE Trans. Power Systems*, Vol. 19, No. 1, February, pp.384–389.

de Oliveira-de Jesus, P.M. and Ponce de Leão, M.T. (2004a) 'Cost loss allocation in distribution networks with embedded generation: a fuzzy approach', *Proceedings of MEDPOWER 2004*, Lymassol, Cyprus, November.

de Oliveira-de Jesus, P.M. and Ponce de Leão, M.T. (2004b) 'Impact of uncertainty and elastic response of demand in short term incremental prices', *Proc. PMAPS2004*, Iowa, September.

de Oliveira-de Jesus, P.M. and Ponce de Leão, M.T. (2005a) 'Distribution loss allocation methods assessment under electricity market environment ', in *Proc. of IEEE St. Petersburg PowerTech 2005*, June 27–30, Russia.

de Oliveira-de Jesus, P.M. and Ponce de Leão, M.T. (2005b) 'Long term cost allocation methodology for distribution networks with distributed generation', *Proceedings of PSCC 2005*, Liege, Belgium, 22–26 August.

de Oliveira-de Jesus, P.M. and Ponce de Leão, M.T. (2005c) 'Cost loss allocation in distribution networks with high penetration of distributed renewable generation – a comparative study', *Proc Int. Conf. Renew. Energy and Powr. Quality*, Zaragoza, March.

de Oliveira-de Jesus, P.M., Ponce de Leão, M.T., Yusta, Khodr, H.M. and Urdaneta, A.J. (2005) 'Uniform marginal pricing for the remuneration of distribution networks', *IEEE Trans. Power Systems*, Vol. 20, No. 3, August, pp.1302–1310.

Elgerd, O.I. (1982) *Electric Energy Systems Theory*, 2nd ed., McGraw-Hill Book Co., NY, pp.284–292.

Galiana, F.D., Conejo, A.J. and Kockar, I. (2002) 'Incremental transmission loss allocation under pool dispatch', *IEEE Trans. Power Systems*, Vol. 17, No. 1, February, pp.26–33.

Goméz Expósito, A., Riquelme Santos, J.M., Gonzales Garcia, T. and Ruiz Velasco, E.A. (2000) 'Fair allocation of transmission power losses', *IEEE Trans. Power Systems*, Vol. 15, No. 1, February, pp.184–188.

Happ, H.H. (1994) 'Cost of wheeling methodologies', *IEEE Trans. Power Systems*, Vol. 9, No. 1, February, pp.147–156.

Hatziargyriou, N., Karakatsanis, T. and Papadogiannis, K. (2002) 'Probabilistic cost allocation of losses in networks with dispersed renewable generation', *Proceedings of PMAPS 2002*, Naples, Italy, September, pp.519–524.

Khodr, H.M., Molea, J., Garcia, I., Hidalgo, C., Paiva, P.C., Yusta, J.M. and Urdaneta, A.J. (2002) 'Standard levels of energy losses in primary distribution circuits for SCADA application', *IEEE Trans. Power Systems*, Vol. 17, No. 3, August, pp.615–620.

Kirschen, D. (2000) 'Factoring the elasticity of demand in electricity prices', *IEEE Trans. Power Systems*, Vol. 15, No. 2, May, pp.612–617.

Kirschen, D. (2003) 'Demand-side view of electricity markets', *IEEE Trans. Power Systems*, Vol. 18, No. 2, May, pp.520–527.

Lima, D.A. and Padilha-Feltrin, A. (2004) 'Allocation of the costs of transmission losses', *Electric Power Systems Research*, Vol. 72, No. 1, November, pp.13–20.

Macqueen, C.N. and Irving, M.R. (1996) 'An algorithm for the allocation of distribution system demand and energy losses', *IEEE Transactions on Power Systems*, Vol. 11, No. 1, February, pp.338–343.

Marangon Lima, J.W., Noronha, C.C., Arango, H. and Steele dos Santos, P.E. (2002) 'Distribution pricing based on yardstick regulation', *IEEE Trans. Power Systems*, Vol. 17, No. 1, February, pp.198–204.

Miranda, V., Pereira, J. and Saraiva, J.T. (2000) 'Load allocation in DMS with a fuzzy state estimator', *IEEE Trans. Power Systems*, Vol. 15, No. 2, May, pp.529–534.

Murphy, L., Kaye, R.J. and Wu, F. (1994) 'Distributed spot pricing in radial distribution systems', *IEEE Trans. Power Systems*, Vol. 9, No. 1, February, pp.311–317.

Mutale, J., Strbac, G., Curic, S. and Jenkins, N. (2000) 'Allocation of losses in distribution systems with embedded generation', *IEE Proc-Gener., Transm., and Distrib*., Vol. 147, No. 1, January, pp.7–14.

Nicholson, W. (1997) *Microeconomic Theory*, 7th ed., The Dryden Press, New York, pp.440, 441, 558.

Ponce de Leão, M.T. and Saraiva, J.T. (2003) 'Solving the revenue reconciliation problem of distribution network providers using long term marginal prices', *IEEE Trans. Power Systems*, Vol. 18, No. 1, February, pp.339–345.

Román, J., Gómez, T., Muñoz, A. and Peco, J. (1999) 'Regulation of distribution network business', *IEEE Trans. Power Systems*, Vol. 14, No. 2, April, pp.662–669.

Rothwell, G. and Gomez, T. (2003) *Electricity Economic Regulation and Deregulation*, 1st ed., MIT Press, New York.

Saenz, J.R., Eguia, P., Berastegui, J.L., Marin, J. and Arceluz, J. (2001) 'Allocating distribution losses to consumers using distribution loss factors', *Proc. IEEE Porto PowerTech 2001*, Vol. 1, September, pp.1–4.

Salgado, R.S., Moyano, C.F. and Medeiros, A.D.R. (2004) 'Reviewing strategies for active power transmission loss allocation in power pools', *International Journal on Electrical Power and Energy System*s, Vol. 26, No. 2, February, pp.81–90.

San Román, T.G. (1999) 'Incentive regulation for distribution companies under electricity competition', *Lawrence Berkeley National Laboratory*, LBNL Internal Report, April.

Saraiva, J.T., Pinto Pereira da Silva, J.L. and Ponce de Leão, M.T. (2000) 'Regulation, tariff schemes and quality of service: a discussion', *Proc. 2000 UIE – International Union of Electricity Applications*, November 1–4, Lisbon, Portugal.

Shrimohammadi, D., Filho, X.V., Gorenstein, B. and Pereira, M.V.P. (1996) 'Some fundamental technical concepts about cost based transmission pricing', *IEEE Trans. Power Systems*, Vol. 11, No. 2, May, pp.1002–1006.

Stoft, S. (2002) *Power System Economics*, IEEE – Wiley Interscience Publication, Piscataway NJ, pp.424–428.

Strbac, G. (2002) 'Impact of dispersed generation on distribution systems: a European perspective', *Proc. Power Engineering Society Winter Meeting*, NY, USA, Vol. 1, pp.118–120.

Wood, A.J. and Wollenberg, B.F. (1996) *Power Generation Operation and Control*, Wiley-Interscience Publication, NY, USA.

Notes

[1]ILFs can be computed directly from a standard load flow study by means of a Newton-Raphson approach or from special load flow algorithms for radial networks.

[2]The implementation of LIPs to all consumer classes at distribution level is a controversial issue and could derive in a discriminatory practice owing to the consumer's geographical placement. Generally, the standard tariff design procedure recovers power losses discriminating by voltage level and consumption profile with some cross-subsidisation between residential and industrial consumers. Conversely, in practise, distributed generators do not pay charges by losses at all.

[3]Energy losses allocated to loads and generators in kWh can be translated in economic charges (\$/h) multiplying by $\lambda_{\text{sys}}K_{Dk}$ and $\lambda_{\text{sys}}K_{Gk}$ respectively using the K-factors presented in Table 3.

[4]Energy losses allocated to loads in percentage of total losses can be translated in \$/h multiplying by $L\ \lambda_{\text{sys}}K_{Dk}/100\%$ using the K-factors presented in Table 3.

[5]Energy losses allocated to generators in percentage of total losses can be translated in \$/h multiplying by $L\ \lambda_{\text{sys}}K_{Gk}/100\%$ using the K-factors presented in Table 3.

[6]To assess each procedure under a perfect market, a theoretical social welfare analysis is made considering all consumers as elastic However, this analysis could be extended in a more realistic basis including inelastic loads (buses with residential loads or industrial consumers with special rate structure).

Appendix: Mathematical formulation

The system power losses are obtained through the following analytical expression as a function of all voltages V and angles θ:

$$L = \frac{1}{2}\sum_{i=1}^{n}\sum_{k=1}^{n} G_{ik}[V_i^2 + V_k^2 - 2V_iV_k\cos(\theta_i - \theta_k)] \tag{10}$$

In order to get the active and reactive incremental loss factors, it is required to apply the chain rule:

$$\frac{\partial L}{\partial \theta_i} = \sum_{k=1}^{n} \frac{\partial L}{\partial P_k} \frac{\partial P_k}{\partial \theta_i} + \sum_{k=1}^{n} \frac{\partial L}{\partial Q_k} \frac{\partial Q_k}{\partial \theta_i} \tag{11}$$

$$\frac{\partial L}{\partial V_i} = \sum_{k=1}^{n} \frac{\partial L}{\partial P_k} \frac{\partial P_k}{\partial V_i} + \sum_{j=1}^{n} \frac{\partial L}{\partial Q_k} \frac{\partial Q_k}{\partial V_i} \tag{12}$$

where the active and reactive power injections are given by:

$$P_k = V_k \sum_{j=1}^{n} V_j [G_{kj} \cos(\theta_k - \theta_j) + B_{kj} \sin(\theta_k - \theta_j)] \tag{13}$$

$$Q_k = V_k \sum_{j=1}^{n} V_j [G_{kj} \sin(\theta_k - \theta_j) - B_{kj} \cos(\theta_k - \theta_j)]. \tag{14}$$

Under incremental analysis, at given operating point, power losses can be allocated to producers and consumers simultaneously through the ILFs. By definition, these coefficients measure the change in power active losses owing to the incremental change in power injections in each node of the network:

$$\mathrm{ILF}_k^P = \eta_K = \frac{\partial L}{\partial P_k} = \frac{\partial L}{\partial (P_{Gk} - P_{Dk})} \tag{15}$$

$$\mathrm{ILF}_k^Q = \frac{\partial L}{\partial Q_k} = \frac{\partial L}{\partial (Q_{Gk} - Q_{Dk})}. \tag{16}$$

By definition, incremental loss factors at slack or reference bus is equal to zero: $\mathrm{ILF}_{sl}^P = \mathrm{ILF}_{sl}^Q = 0$.

Substituting equations (16) and (17) in equations (12) and (13), we obtain the following expressions:

$$\frac{\partial L}{\partial \theta_i} = \sum_{k=1}^{n} \mathrm{ILF}_k^P \frac{\partial P_k}{\partial \theta_i} + \sum_{k=1}^{n} \mathrm{ILF}_k^Q \frac{\partial Q_k}{\partial \theta_i} \qquad i = 1,\ldots,n \qquad i \neq sl \tag{17}$$

$$\frac{\partial L}{\partial V_i} = \sum_{k=1}^{n} \mathrm{ILF}_k^P \cdot \frac{\partial P_k}{\partial V_i} + \sum\nolimits_{k=1}^{n} \mathrm{ILF}_k^Q \cdot \frac{\partial Q_k}{\partial V_i}. \tag{18}$$

Equations (18) and (19) can be written as a system of linear equations that is solved eliminating the columns and rows correspondent to slack bus:

$$\begin{bmatrix} ILF_1^P \\ ILF_2^P \\ \vdots \\ ILF_n^P \\ \hline ILF_1^Q \\ ILF_2^Q \\ \vdots \\ ILF_n^Q \end{bmatrix} = \left[\begin{array}{cccc|cccc} \frac{\partial P_1}{\partial \theta_1} & \frac{\partial P_2}{\partial \theta_1} & \cdots & \frac{\partial P_n}{\partial \theta_1} & \frac{\partial Q_1}{\partial \theta_1} & \frac{\partial Q_2}{\partial \theta_1} & \cdots & \frac{\partial Q_n}{\partial \theta_1} \\ \frac{\partial P_1}{\partial \theta_2} & \frac{\partial P_2}{\partial \theta_2} & \cdots & \frac{\partial P_n}{\partial \theta_2} & \frac{\partial Q_1}{\partial \theta_2} & \frac{\partial Q_2}{\partial \theta_2} & \cdots & \frac{\partial Q_n}{\partial \theta_2} \\ \vdots & \vdots & \ddots & \vdots & \vdots & \vdots & \ddots & \vdots \\ \frac{\partial P_1}{\partial \theta_n} & \frac{\partial P_2}{\partial \theta_n} & \cdots & \frac{\partial P_n}{\partial \theta_n} & \frac{\partial Q_1}{\partial \theta_1} & \frac{\partial Q_1}{\partial \theta_1} & \cdots & \frac{\partial Q_1}{\partial \theta_1} \\ \hline \frac{\partial P_1}{\partial V_1} & \frac{\partial P_2}{\partial V_1} & \cdots & \frac{\partial P_n}{\partial V_1} & \frac{\partial Q_1}{\partial V_1} & \frac{\partial Q_2}{\partial V_1} & \cdots & \frac{\partial Q_n}{\partial V_1} \\ \frac{\partial P_1}{\partial V_2} & \frac{\partial P_2}{\partial V_2} & \cdots & \frac{\partial P_n}{\partial V_2} & \frac{\partial Q_1}{\partial V_2} & \frac{\partial Q_2}{\partial V_2} & \cdots & \frac{\partial Q_n}{\partial V_2} \\ \vdots & \vdots & \ddots & \vdots & \vdots & \vdots & \ddots & \vdots \\ \frac{\partial P_1}{\partial V_n} & \frac{\partial P_2}{\partial V_n} & \cdots & \frac{\partial P_n}{\partial V_n} & \frac{\partial Q_1}{\partial V_n} & \frac{\partial Q_2}{\partial V_n} & \cdots & \frac{\partial Q_n}{\partial V_n} \end{array}\right]^{-1} \begin{bmatrix} \frac{\partial L}{\partial \theta_1} \\ \frac{\partial L}{\partial \theta_2} \\ \vdots \\ \frac{\partial L}{\partial \theta_n} \\ \hline \frac{\partial L}{\partial V_1} \\ \frac{\partial L}{\partial V_2} \\ \vdots \\ \frac{\partial L}{\partial V_n} \end{bmatrix}. \tag{19}$$

Entries of the transpose of Jacobean and the right-hand vector are obtained from the partial derivatives

$$\frac{\partial P_k}{\partial \theta_i}, \frac{\partial P_i}{\partial \theta_i}, \frac{\partial P_k}{\partial V_i}, \frac{\partial P_i}{\partial V_i}, \frac{\partial Q_k}{\partial \theta_i}, \frac{\partial Q_i}{\partial \theta_i}, \frac{\partial Q_k}{\partial V_i}, \frac{\partial Q_i}{\partial V_i}$$

using expressions (11), (14) and (15), respectively:

$$\frac{\partial P_i}{\partial \theta_k} = V_i V_k [G_{ik} \sin(\theta_i - \theta_k) - B_{ik} \cos(\theta_i - \theta_k)] \tag{20}$$

$$\frac{\partial P_i}{\partial \theta_i} = -B_{ii} V_i^2 - \sum_{k=1}^{n} V_i V_k [G_{ik} \sin(\theta_i - \theta_k) - B_{ik} \cos(\theta_i - \theta_k)] \tag{21}$$

$$\frac{\partial P_i}{\partial V_k} = V_i [G_{ik} \cos(\theta_i - \theta_k) + B_{ik} \sin(\theta_i - \theta_k)] \tag{22}$$

$$\frac{\partial P_i}{\partial V_i} = G_{ii} V_i + \sum_{k=1}^{n} V_k [G_{ik} \cos(\theta_i - \theta_k) + B_{ik} \sin(\theta_i - \theta_k)] \tag{23}$$

$$\frac{\partial Q_i}{\partial \theta_k} = -V_i V_k [G_{ik} \cos(\theta_i - \theta_k) + B_{ij} \sin(\theta_i - \theta_k)] \tag{24}$$

$$\frac{\partial Q_i}{\partial \theta_i} = -G_{ii} V_i^2 + \sum_{k=1}^{n} V_i V_k [G_{ik} \cos(\theta_i - \theta_k) + B_{ik} \sin(\theta_i - \theta_k)] \tag{25}$$

$$\frac{\partial Q_i}{\partial V_k} = V_i [G_{ik} \sin(\theta_i - \theta_k) - B_{ik} \cos(\theta_i - \theta_k)] \tag{26}$$

$$\frac{\partial Q_i}{\partial V_i} = -B_{ii}V_i + \sum_{k=1}^{n} V_k[G_{ik}\sin(\theta_i - \theta_k) - B_{ik}\cos(\theta_i - \theta_k)] \tag{27}$$

$$\frac{\partial L}{\partial \theta_i} = 2\sum_{k=1}^{n} V_i V_k G_{ik}\sin(\theta_i - \theta_k) \tag{28}$$

$$\frac{\partial L}{\partial V_i} = 2\sum_{k=1}^{n} G_{ik}[V_i - V_k\cos(\theta_i - \theta_k)]. \tag{29}$$

Computations of losses allocated to generators connected to bus k are given by:

$$L_{Gk} = P_{Gk} \cdot ILF_k^P \quad k = 1, \ldots, n. \tag{30}$$

In agreement with the *uniform marginal pricing* proposal presented by de Oliveira et al. in de Oliveira-de Jesus et al. (2005), the decomposition of an hourly marginal price ρ applied to a distribution-user can be described as the sum of marginal cost of energy λ_{sys} and the tariff of use of the distribution network η:

$$\rho = \lambda_{\text{sys}} + \xi \quad \text{where} \quad \xi = \lambda_{\text{sys}}\frac{\partial L}{\partial P_{Di}} + \mu + \gamma = \lambda_{\text{sys}}\text{ILF}_u^P + \mu + \gamma. \tag{31}$$

Neglecting the congestion (μ) and the investment cost component (γ), the following expression is applied in order to obtain a uniform incremental loss factor ILF_u^P as a function of all nodal incremental loss factors ILF_k^P:

$$\text{ILF}_u^P = \frac{\sum_{k=1}^{n}\text{ILF}_k^P P_{Dk}}{\sum_{k=1}^{n} P_{Dk}}. \tag{32}$$

Then, losses allocated to demands are:

$$L_{Dk} = -P_{Dk} \cdot \text{ILF}_u^P = -P_{Dk} \cdot \frac{\sum_{k=1}^{n}\text{ILF}_k^P P_{Dk}}{\sum_{k=1}^{n} P_{Dk}} \quad k = 1, \ldots, n. \tag{33}$$

However, as a result of non-linearity of losses, the sum of allocated losses does not match with the actual losses of the system.

$$\sum_{k=1}^{n} L_{Gk} + \sum_{k=1}^{n} L_{Dk} > L. \tag{34}$$

A reconciliation factor is calculated:

$$k_o = \left| \frac{\frac{1}{2}\sum_{i=1}^{n}\sum_{k=1}^{n} G_{ik}\left[V_i^2 + V_k^2 - 2V_iV_k\cos(\theta_i - \theta_k)\right]}{\sum_{k=1}^{n} L_{Gk} + \sum_{k=1}^{n} L_{Dk}} \right|. \tag{35}$$

New reconciled incremental loss factors are:

$$K_{Gk} = \eta_{Gk} = k_o \mathrm{ILF}_k^P \quad k = 1, \ldots, n \tag{36}$$

$$K_{Dk} = \eta_{Du} = -k_o ILF_u^P \quad k = 1, \ldots, n \tag{37}$$

and, power losses allocated are obtained as:

$$L_{Gk} = P_{Gk} \cdot \eta_{Gk} \quad k = 1, \ldots, n \tag{38}$$

$$L_{Dk} = -\eta_{Du} P_{Dk} \quad k = 1, \ldots, n. \tag{39}$$