State Estimation of Power Electric System with Fuzzy and Paraconsistent Annotated Logics

J. I. Da Silva Filho, *Member, IEEE*, J. Pereira, A. Rocco, *Member, IEEE*, M. C. Mário, E. F. Azeredo and V. G. L. Gardiman

***Abstract* -- In this work we presented a way of State Estimation in Electric Power Systems through applications of algorithms based on the Fuzzy logic and the Paraconsistent Annotated Logic. A Fuzzy State Estimator (FSE) it uses the fuzzy logic foundations to insert an ideal treatment to the inherent uncertainties of the process of state estimation. For a better use of the applications of the estimation fuzzy process the FSE needs inputs signals free from noises and contradictions. To give a better treatment to the input signals and also to validate the output resulting values of the FSE it is applied the techniques of the Paraconsistent Annotated Logic. The Paraconsistent Logic belongs to the family of non-classic logics and its main characteristic is the admission of the contradiction in their foundation. The blocks of treatment of the input signals and of the output signals of the FSE it uses originated algorithms from of a Logic class named Paraconsistent Annotated Logic with annotation of two values (PAL2v). In several works the LPA2v has been showing effective in the analyses of signals from uncertain databases that allow considering their algorithms with a great capacity to give a better treatment to the inaccuracy and any inconsistencies in those data. In this research we addressed the application of PAL2v to do a treatment at values and the FSE, extracting the representative real data from electric loads directly from SCADA (Supervisory Control And Dates Acquisition System) of a pilot electric system of 37 bus of the ESCELSA Electric Company in Brazil.**

***Index Terms* - state estimation, power system, non-classic logic, fuzzy logic, paraconsistent annotated logic.**

I. Introduction

IN the modern Energy Management Systems (EMS) the State Estimation processes a set of measurements data and network data and it supplies in real time a solution to the problem of power flow, which are used as base for the functions that monitor the safety of the system and they make its control. The State Estimation is based on mathematical relationships among the state variables of the system (magnitudes and phases of the buses voltages) and the measurements [2][13]. The electrical quantities more used for measurements are injected power in buses, power flows and current magnitudes in branches, and the voltage magnitudes in buses. Besides the solution of the power flow in real time the state estimator also has, among other, functions for detection of incoherent data in measurements, placement of measurement points and observability analysis [15].

The increase of the complexity of the electrical power systems made to also increase the complexity of its control and the importance of the State Estimation process. In this work we presented a way of State Estimation in Electrical Power Systems through applications of algorithms based on the Fuzzy logic and the Paraconsistent Annotated Logic. The Fuzzy State Estimator (FSE) [18] it uses the fuzzy logic foundations to insert an ideal treatment to the inherent uncertainties of the process of state estimation.

The Fig. 1 shows how they are willing the main blocks for the paraconsistent treatment of signals and the state estimation with the Fuzzy logic.

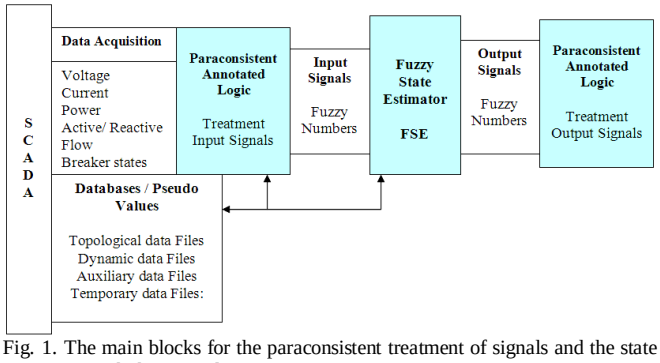

Fig. 1. The main blocks for the paraconsistent treatment of signals and the state estimation with the Fuzzy logic.

II. Paraconsistent Annotated Logic with Annotation of Two Values PAL2v

The Paraconsistent Annotated Logic (PAL) [1] [7] belongs to the class of evidential logics and makes analyzes of signals acted by annotations that attribute logical states to the proposition. An interpretation of PAL in an associated lattice allows the extraction of values and the creation of algorithms for the formation of analyses systems denominated Paraconsistent Analyzer Nodes - PANs [6] [8] [9]. A summary, where it is used intuitive manners for the logical interpretation, will be presented as following.

Consider that a propositional formula P is accompanied of an annotation composed by two evidence degrees [1] [5] [6], which we called by Paraconsistent Logical Signal representation - $P_{(\mu,\lambda)}$ - where:

- P - Proposition to be analyzed;
- (μ,λ) - Annotation related to the Proposition P;
- μ - Favorable evidence degree to the proposition P, whose value is a real number belonging to the interval [0,1];

J.I. Da Silva Filho, A. Rocco and M. C. Mário are with UNISANTA - Santa Cecilia University, Rua Oswaldo Cruz, 266, CEP 11045-100 Santos City SP-Brazil (e-mail: jinacsf@yahoo.com.br, a.rocco@terra.com.br, cmario@terra.com.br)

J. Pereira is with Faculdade de Economia da Univ. do Porto, Portugal, and also with INESC Porto, Campus da FEUP, Rua Dr. Roberto Frias, 4200-465 Porto, Portugal, (email: jpereira@inescporto.pt)

E. F. Azeredo is with EDP ESCELSA, Rua Quintino, 81, Vitoria, ES, Brazil (e-mail: eliasfa@enbr.com.br).

V.G. L. Gardiman is with EDP Bandeirante, Av. Dr. Deodato Wertheimer, 1.212, M. Cruzes CEP 08710 – 110 SP, Brazil (e-mail: vlgg@enbr.com.br).

- λ - Unfavorable evidence degree to the proposition *P*, this value is a real number belonging to the interval [0,1].

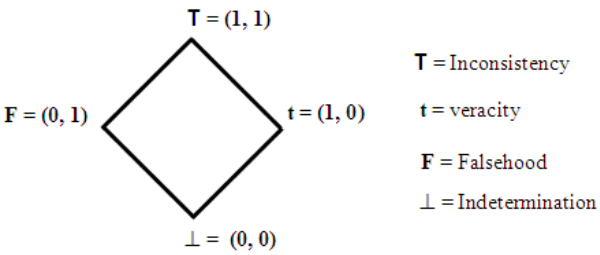

Fig. 2. Finite lattice and extreme logical states.

Therefore, the PAL with annotation of two values (PAL2v) could be associated to the lattice of four vertices (Fig. 2) where the annotations are allocated. In this model the annotations assigns logical states to the proposition in the following way:

(μ, λ) = (1, 0) ⇒ True logical state t
(μ, λ) = (1, 1) ⇒ Inconsistent logical state T
(μ, λ) = (0, 1) ⇒ False logical state F
(μ, λ) = (0, 0) ⇒ Uncertain logical state ⊥

Considerations done in the lattice associated to the PAL2v allow that certainty degrees D_C and contradiction degrees D_{ct} can be calculated through the values of the evidence degrees that compose the annotation.

The evidence degrees can be originated from different agents of information [5] [6]. The interpretative method results in a lattice associated to the PAL2v built with values of D_C and D_{ct} made calculations by (1) and (2).

$$D_{ct} = \mu_1 + \lambda - 1 \quad (1)$$

$$D_c = \mu_1 - \lambda \quad (2)$$

Could be verified by (1) and (2) that D_C and D_{ct} are dependents of the evidence degrees that compose the annotation and it was related to infinites logical states attributed to the proposition P and it contains in the internal areas of the lattice [6]. The Fig. 3a presents lattice associated of the PAL2v with values of D_C and D_{ct}.

III. Paraconsistent Analyzer Node (PAN)

The description of lattice associated to the PAL2v built with the values of the certainty degree D_C and the contradiction degree D_{ct} results in an algorithm named Paraconsistent Analyzer Node – PAN [8] [9]. In the analysis based in PAL2v a PAN is considered the element capable to treat two evidence signals and it shows as result a real evidence degree μ_{ER}, free of contradiction effects, and one value of Interval of Evidence, used as informative about the existent contradiction in the analysis. Fig. 3b shows the symbol of a PAN. The PAN algorithm used in the analyses of the input/output signals of the FSE has the next steps:

1. Enter with the input values
μ */ favorable evidence degree $0 \le \mu \le 1$
λ */ unfavorable evidence degree $0 \le \lambda \le 1$

2. Calculate the contradiction degree
$D_{ct} = (\mu + \lambda) - 1$

3. Calculate the Interval of Certainty
$\varphi = 1 - |D_{ct}|$

4. Calculate the certainty degree
$D_C = \mu - \lambda$

5. Calculate the distance *d* into Lattice
$$d = \sqrt{(1 - |D_C|)^2 + D_{ct}^2}$$

6. Compute the output signal
if $\varphi \le 0{,}25$ or $d \ge 1$
then do S1= 0.5 and S2= φ:
Indefinite logical state and go to the steep 10
else go to the next step

7. Calculate the real certainty degree
if DC > 0 then DCR = (1 - d)
if DC < 0 then DCR = (d - 1)

8. Compute the signal of the Interval of Certainty
if μ+ λ > 1 then Signal positive φ(±) = φ(+)
if μ+ λ < 1 then Signal negative φ(±) = φ(-)
if μ+ λ = 1 then Signal zero φ(±) = φ(0)

9. Calculate the real evidence degree
$$\mu_{ER} = \frac{D_{CR} + 1}{2}$$

10. Present the outputs
S1 = μ_{ER} and S2= φ(±)

11. End

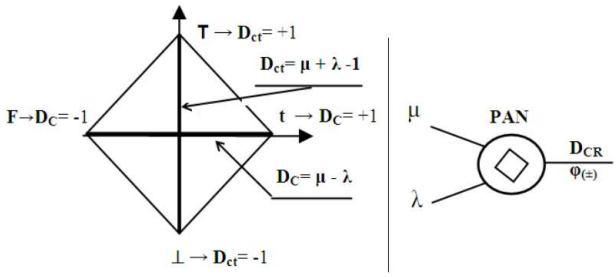

(a) (b)

Fig. 3 (a) Lattice associated of the PAL2v built with values of DC and Dct.
(b) PAN symbol – Paraconsistent Analyzer Node.

IV. Basic Operation of the Fuzzy / Paraconsistent State Estimation

The state estimation Fuzzy / Paraconsistent system [24] is composed by four main blocks:

- Acquisition and paraconsistent treatment of the primary signals;
- Paraconsistent detection of network topology;
- Fuzzy state estimation;
- Modeling and paraconsistent treatment of the output signals.

Those four main blocks have their actions controlled by the supervisory system that addresses the signals and it acts in the restrictions as adjustments established externally by the user.

A. Acquisition and paraconsistent treatment of primary signal

The acquisition and paraconsistent treatment of primary signals module makes the capture of the signals of interest for the state estimation. Afterwards a treatment is given to standardize the values of electrical quantities that, being captured in their units of measurements, they are transformed in input evidence degrees to compose the annotations and to

receive the due treatments made by the PAL System algorithms.

As primary information for the logical treatment the engineering quantities are considered as: the value of the current magnitude; the value of the voltage magnitude; the value of the apparent power; value of discrepancy degrees and others of interest in the state estimation process. The values of voltage will be obtained by measurements made by SCADA (Supervisory Control and Data Acquisition System) of the transmission buses where are linked the breakers and electric switch or equipments of the electrical power system [11] [13]. The current values will be obtained by measurements made by the SCADA coming of the interconnection buses of the breakers that supply the values of originating from current the connected load to the circuit which the breaker is maneuvering. The signals acquisition flow and the contradiction extraction are represented through a diagram of blocks in Fig. 4. After having done the classification of the formats, the primary values receive an initial treatment of normalization inside of the charge limits, of the demand, and other restrictions that will be established for an Universe of Discourse. This way, each values inside of its classified format it will represent an evidence degree inside of interval of the real numbers between 0 and 1.

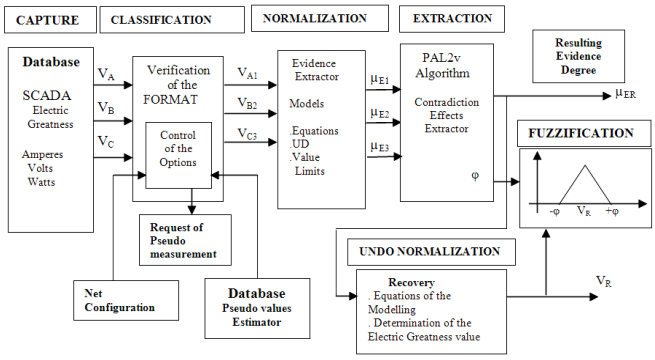

Fig. 4 Acquisition and paraconsistent treatment of input signals.

Only after the normalization, where the quantity is transformed in paraconsistent logical values that vary between 0 and 1, it is the three signals that will go by the logical procedure of PAL2v which we called by contradiction effects extraction. The output of the contradiction effects extractor will introduce a single value of real evidence degree; this signal will be used in the construction block of the fuzzy number, or Fuzzification block. In that phase the resulting value of the signal from the quantity that is being monitored, and that comes as evidence degree, it can be recovered in its engineering unit. That recovery is made by the undo normalization block that uses the same equation of the normalization process. Therefore, the undo normalization block allows the recovery of the only and representative value of the original three extracted from the database.

A.1 Normalization

In this first action the signals in their engineering values enter in a modelling process that begins with the selection of an Interest Interval or Discourse Universe. Besides that, the signals are treated mathematically and their values inserted inside to the closed interval [0,1] belonging to the set of the real numbers, which mean evidence degrees μ_E in PAL2v methodology.

A.2 Extraction of the contradiction effects

In that second action the signals that are represented by the evidence degrees are analyzed successively by algorithms of PAL2v that are composed by a PAN called by Contradiction Effects Extractor. The Fig. 6 shows the representation of the extractor algorithm of contradiction that uses a network with three PANs.

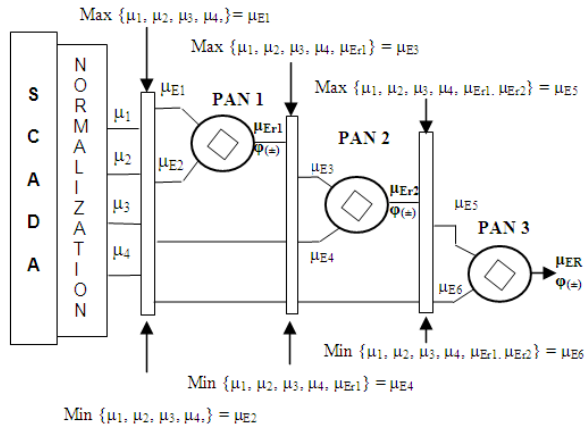

Fig. 3. Contradiction Effect Extractor algorithm PAL2v.

The PANs receive values from the SCADA. The values are normalized, treated through maximization and minimization, and analyzed with the PAL2v methods. This process makes the contradiction effects extraction in four originated signals from the database, resulting in only one signal of real evidence degree μ_{ER}.

A.3 Undo normalization

In that third action the signals obtained in the process from the contradiction effects extraction are computed appropriately for the recovery of their values in engineering units. For that undo normalization process the same intervals of interest and the same equations from the normalization are used.

A.4 Fuzzification

The fuzzification system has the function of building a Triangular Fuzzy Number (TFN) that is representative of the paraconsistent analysis made in the monitored point.

The paraconsistent logical algorithm supplies the value for the crisp number (crisp value) and the limits of the membership function that it will be built. The maximum limit values and minimum limit values, that will define the fuzzy interval, will be obtained by the Interval of Evidence from the Paraconsistent analysis made by a final PAN of the Contradiction System Extractor. The fuzzy number is built according to (3) and (4).

$$Vlmax = VL_{unG} + (\varphi_{ER} \times VL_{unG}) \quad (3)$$

$$Vlmin = VL_{unG} - (\varphi_{ER} \times VL_{unG}) \quad (4)$$

Where:

- Vlmax is the maximum limit value;

- Vlmin is the minimum limit value.
- VL_{unG} is the resulting value in engineering unit obtained as output of the undo normalization block;
- φ_{ER} is the value of the Interval of Evidence obtained in last PAN that extracts the effect from the contradiction;

A.4.1 Paraconsistent detection of network topology

In a power system the network topology is obtained through the considerations on the state certain logical monitored point. Being like this, the paraconsistent detection will be made with base in the paraconsistent analysis considering the following proposition: P_{Top} "The Monitored point is energized". In that way, the evidence degree regarding that proposition will always express the evidence degree of certain monitored point to be inserted in the system. The paraconsistent module of network topology detection has the function of analyzing the available signals of SCADA database, to do comparisons with historical database signals and to inform through results acted by evidence degrees which is the current topology in that system. The input evidence degrees for the paraconsistent analysis system that will occur in the monitored point, will be firstly extracted from SCADA database that will inform the status of each breaker or electrical switch responsible for the energization of the monitored point. The paraconsistent analysis will confront the values and it emits an evidence degree that can be analyzed by other classifying modules, developing like this a flow of reliable data for the state estimation system. In whole the process the paraconsistent analysis will be made considering the constraints and demand class (light load, average load or heavy load) and it will supply subsidies for the making of the analyses in the module of acquisition and treatment of the primary signals, whose operation was presented previously, and also for the state estimation module that will be detailed later.

A.4.2 Signals of logical states sources

For the acquisition of evidences that allows the paraconsistent analysis, forming the logical process of generation of the evidence degree about the proposition P_{Top}: "The Monitored point is energized" the SCADA data related to the status of the breakers and electrical switch are used. Therefore, it is considered as information source the data of breakers and electrical switch that contribute in the energization of the line where the monitored point is.

The maximum evidence which breaker (or electrical switch) it is connected, and with that energizing certain connected bar to the monitored point, it checks the maximum evidence degree same to 1 for the proposition P_{Top}. The evidence shortage that the breaker (or electrical switch) it is connected, or disconnected, it provokes the decrease of the evidence degree regarding the proposition P_{Top} in analysis. For the Paraconsistent analysis, the models of those equipments were created and, with that, the respective algorithms for the Expert System FSE.

B Fuzzy state estimation

The FSE Module receives the fuzzy values and treats uncertainties. The integration of fuzzy uncertainties gives the algorithm a new degree of flexibility and a new field of applicability namely to distribution networks. In these networks the number of measurement devices is usually small so that running a state estimation code, as in transmission networks, would be virtually impossible. In an attempt to run state estimation in networks with a lack of measurements, we can also run a Load Allocation study [12] [18] to obtain more data modeled by fuzzy numbers.

B.1 Traditional State Estimation

Let us consider a system having available a set measurements related with voltages, branch currents, active and reactive flows, generated powers and loads. Let us admit that the state variables are the nodal voltages and phases and that a bus was selected for phase reference. To estimate the values of the resulting state variables it is necessary to have a number of measurements at least equal to the number of state variables [13] [18] [22]. However, it is advisable to have a certain redundancy degree so that the results are more immune from errors affecting some particular measurements. According to these ideas, let us admit that:

- Z is the measurement vector ;
- X is the state vector;
- h(X) is a vector of functions relating a measured variable with state variables;
- ε is the error vector of measured values.

These elements are related by (5). In this general model the elements of the error vector ε are random variables having zero mean and a covariance matrix R. In this matrix one usually assumes that R_{ij} covariances between measurements i and j are zero meaning that the measurements are considered independent. In this case, R is a diagonal matrix.

$$Z = h(X) + \varepsilon \tag{5}$$

The most traditional State Estimation (SE) algorithm is the Weighted Least Squares – WLS – that will now be very briefly summarized [13]. This algorithm basically aims at minimizing the sum of the squares of the measurement errors ε weighted by the elements in the inverse of R (6). This means that in a SE study we aim at identifying the elements in X that better explain the values in the measurement vector Z.

$$\min \left[Z - h(X)\right]^T R^{-1} \left[Z - h(X)\right] \tag{6}$$

For this problem, it is possible to obtain the stationary conditions corresponding to the non-linear set of equations (7). In this expression, H is the Jacobean matrix of the measurement vector h(X).

$$H(X)^T R^{-1} \left[Z - h(X)\right] = 0 \tag{7}$$

This set of non-linear equations can be solved in an iterative way using the Newton-Raphson method. In iteration k+1, the values of the state variables X are obtained using (8). In this recursive expression, G is the gain matrix (9) and X^k and X^{k+1} are the state vectors in iteration k and k+1.

$$X^{k+1} = X^k + \left(G^k\right)^{-1} \left[H\left(X^k\right)\right]^T R^{-1} \left[Z - h\left(X^k\right)\right] = 0 \tag{8}$$

$$G^k = \left[H\left(X^k\right)\right]^T R^{-1} \left[H\left(X^k\right)\right] \tag{9}$$

When the iterative process converges, one obtains values for the state variables and, using them, for every other variable in

the network (active and reactive injections, active and reactive flows and currents and active and reactive losses). The literature describes many other state estimation models and algorithms [13] [22] [23], some of them specially interesting for distribution networks.

B.2 Incorporation of fuzzy data

The first step of the a FSE Model corresponds to run a crisp SE study as described in previous section using the set of central values of the fuzzy measurement vector, $\tilde{Z}$. From this study we compute a state vector X_1 that will be used as a linearization point. In the second step, we compute the fuzzy deviations of the measurements (10) to be reflected in the state variables using (11). In this expression, G and H are the gain and the Jacobean matrixes built in the last iteration of the crisp state estimation ran in the first step.

$$\Delta\tilde{Z} = \tilde{Z} - h(X_1) \tag{10}$$

$$\Delta\tilde{X} = X_1 + (G^{-1}H^T R^{-1})\Delta\tilde{Z} \tag{11}$$

To compute fuzzy membership functions for flows and currents, we can use their crisp values obtained with the state vector computed in the first step. The flow, F_{ij}, in branch i-j depends on the voltage and phase in nodes i and j.

Variations on F_{ij} can be approximated by (12) using voltage and phase fuzzy variations.

These fuzzy deviations are added to the crisp values obtained in the crisp state estimation (13).

$$\Delta\tilde{F}_{ij} \cong \left.\frac{\partial F_{ij}}{\partial \theta_i}\right|_{X1} \Delta\tilde{\theta}_i + \left.\frac{\partial F_{ij}}{\partial \theta_j}\right|_{X1} \Delta\tilde{\theta}_j + \left.\frac{\partial F_{ij}}{\partial V_i}\right|_{X1} \Delta\tilde{V}_i + \left.\frac{\partial F_{ij}}{\partial V_j}\right|_{X1} \Delta\tilde{V}_j \tag{12}$$

$$\tilde{F}_{ij} = F_{ij} + \Delta\tilde{F}_{ij} \tag{13}$$

More information about FSE can be obtained in [16] [17] and [18]. In [16] [19] and [21] are done the comparisons between traditional estimation algorithms and the FSE algorithm.

C. Modeling and paraconsistent treatment in the output signals

The modeling and paraconsistent treatment module of output signals have the function of after the analyses made by the FSE to present as result values capable to be analyzed in form of engineering units. Those values in engineering units will be used for the operators analyses and they will be available the subsequent actions in the Control Center of the ESCELSA Electric System, for power flow analysis or for contingencies analyses. As in the Fuzzy / Paraconsistent Expert System the SE process can be interlinked in an independent way, or no, of the analysis made for an FSE module, the treatment process and modeling of the output signal can be made by two types of procedures: by undo normalization as described; or by defuzzification followed by undo normalization. In the case of defuzzification followed by an undo normalization of the output signals, after the FSE process the module receives the available resulting values that are in the shape of triangular fuzzy number. A special algorithm based in PAL2v that considers the fuzzy values, interprets and makes the defuzzification obtaining evidence degree. With these evidence degrees values obtained in the defuzzification process, is done an undo normalization transforming them in values of correspondent units related with the engineering quantity.

D. Results in the Acquisition and paraconsistent treatment of input signals

As example we presented in the Tabela I the treatment of signals in nine bus of the ESCELSA Electric Power System where are obtained in the SCADA database three different values of the electric voltage (Volt). In spite of the existent contradiction among them, the PAL2v logic makes the treatment of the electric signals through the algorithms that it results in a Triangular Fuzzy number will be used as input for FSE.

Table I - Result of the simulation with logical PAL2v treatment in the values of voltage in 9 bus of the ESCELSA Electric System.

	SpecVoltMag			Measured value in the Node Vtension SCADA	Triangular Fuzzy Number		
	min	spe	max		Vmin	Vcrisp	Vmax
Bus 15	134	138	143	138.7	108.03	141.04	174.05
Bus 16	134	138	143	142.6	73.05	138.28	203.51
Bus 17	134	138	143	141	89.42	139.41	189.40
Bus 18	134	138	143	135	80.78	137.29	193.80
Bus 19	134	138	143	139.2	108.15	140.69	173.23
Bus 20	134	138	143	133	* 134	138	143
Bus 21	134	138	143	144	* 134	138	143
Bus 22	134	138	143	138.1	119.74	141.46	163.18
Bus 23	134	138	143	137.9	114.24	135.24	156.24

*the system return the range when measure value is out.

In the table II we presented the results of the treatment in nine electric voltage signals (Volt) obtained in FSE outputs. In that function the PAL2v logic transforms a Triangular Asymmetrical Fuzzy number in a Triangular symmetrical Fuzzy number with the respective Real Degree Evidence.

Table II - Result of the simulation with logical PAL2v treatment in the values of Tension in 9 bus of the ESCELSA Electric System.

	Asymmetrical Fuzzy Number			Symmetrical Fuzzy Number			Evidence Real Degree	Measure Value
	Vminasy	Vcrispasy	Vmaxasy	Vminsy	Vcrispsy	Vmaxsy	μ_{ER}	
Bus 15	137.44	138.98	142.51	64.45	138.98	213.51	0.13417	137.98
Bus 16	134.6	136	139	83.27	138.99	194.72	0.00482	137.98
Bus 17	137	138	139	96.6	138	179.4	1.0	138
Bus 18	137	138	139	27.6	138	248.4	1.0	138
Bus 20	130	138	146	96.6	138	179.4	0.00483	140
Bus 21	130	132	143	66.41	132	197.59	0.015246	131
Bus 22	134	138	143	66.41	132	197.59	0.152457	142
Bus 23	128	129	139	64.17	129	193.83	0.015425	130

alphacut = 0.3

V. Conclusion

The process of state estimation using fuzzy logic and paraconsistent logic brings the advantage of offering a uncertainties treatment of larger efficiency in relation to the used by processes purely mathematical. In that estimation system it is possible the use in a sequential way and in some parts of the process, in a simultaneous way, the methods of the two logics. Being like this the estimation has the inclusion uncertain treatment signals together with other data, that it is a characteristic of the fuzzy logic, and an appropriate treatment of contradictory signals, that it is a characteristic of the paraconsistent logic. That hybrid model that uses the foundations of the Fuzzy / Paraconsistent logics has been

tested with success in a pilot system of 37 buses, that it models a part of the Power System of the ESCELSA Electric Company in Brazil. The obtained results indicate that in a close future this state estimation technique will be extended to other points of the Electric Power System.

VI. REFERENCES

[1] Abe, J.M., Da Silva Filho, J.I., "Inconsistency and Electronic Circuits", *Proc. of EIS'98 - International ICSC Symposium on Engineering of Intelligent Systems*, Vol.3, Artificial Intelligence, Editor: E. Alpaydin, ICSC Academic Press International Computer Science Conventions Canada/Switzerland, ISBN 3-906454-12-6, pp.191-197, 1998.

[2] Alsac, O., Vempati, N., Stott, B., Monticelli, A., (1997), "Generalized State Estimation", in Proceedings of the Power Industry Computer Applications Conference, PICA'97, Columbus, Ohio, USA, May 1997.

[3] Anand, R., Subrahmanian, V.S., "A Logic Programming System Based on a Six-Valued Logic" *AAAI/Xerox Second Intl. Symp. on Knowledge Eng.*, Madrid, Spain, 1987.

[4] CIGRE, *Pratical use of expert systems in planning and operation of power systems*, TF 38.06.03, Électra, n.146, pp.30-67, Feb. 1993

[5] Da Costa, N.C.A., Abe, J.M., Subrahmanian, V.S., "Remarks on annotated logic", *Zeitschrift f. math. Logik und Grundlagen d. Math.* 37, Vol.37, pp 561-570, 1991.

[6] Da Silva Filho, J.I, Rocco, A, Mario, M.C. Ferrara, L.F.P. "Annotated Paraconsistent logic applied to an expert System Dedicated for supporting in an Electric Power Transmission Systems Re-Establishment", *IEEE PES - PSC 2006 Power System Conference and Exposition*, pp. 2212-2220, ISBN-1- 4244-0178-X, Atlanta, USA, 2006.

[7] Da Silva Filho,J.I., Métodos de interpretação da Lógica Paraconsistente Anotada com anotação com dois valores LPA2v com construção de Algoritmo e implementação de Circuitos Eletrônicos, in portuguese Ph D thesis, University of São Paulo, POLI/USP - São Paulo, 1999.

[8] Da Silva Filho, J.I., Rocco A., Mario, M.C., Ferrara L.F.P. "PES - Paraconsistent Expert System: A Computational Program for Support in Re-Establishment of The Electric Transmission Systems", *Proc. of LAPTEC2007 - VI Congress of Logic Applied to Technology*, p.217, ISBN 978-85-99561-45-4, Santos, SP, Brazil, Nov., 2007.

[9] Da Silva Filho, J.I, Rocco, A., Onuki, A.S., Ferrara, L.F.P., Camargo, J.M. "Electric Power Systems Contingencies Analysis by Paraconsistent Logic Application", *Proc. of ISAP2007 - 14th International Conference on Intelligent System Applications to Power Systems*, pp 112-117- Kaohsiung, Taiwan, Nov., 2007.

[10] Da Silva Filho, J.I. & Rocco, A. "Power systems outage possibilities analysis by Paraconsistent Logic" Power and Energy Society General Meeting - Conversion and Delivery of Electrical Energy in the 21st Century, IEEE ISBN: 978-1-4244-1905-0, ISSN: 1932-5517pp(1-6) Pittsburgh, PA, 2008.

[11] Lu, C. N., J. H. Teng, W.-H. E. Liu, "Distribution System State Estimation", Proc. of IEEE/PES 1994 Winter Meeting, New York, 1994.

[12] Miranda V., J. Pereira, J. T. Saraiva, "Load Allocation in DMS with a Fuzzy State Estimator", *IEEE Trans. on PWRS*, Vol. 15, No. 2, pp. 529-534, May 2000.

[13] A. Monticelli, *State Estimation in Electric Power Systems – A Generalized Approach*, Kluwer´s Power Electronics and Power Systems Series, M. A. Pai series editor, 1999.

[14] M. B. do Coutto Filho, A. M. Leite da Silva, D. M. Falcão., "Bibliography on power system state estimation (1968-1989)", *IEEE Trans. on PWRS*, Vol. 5, No.3, Aug. 1990.

[15] Pereira, J. T., Miranda V. Saraiva, J., "Combining Fuzzy and Probabilistic Data in Power System State Estimation", *Proc. of PMAPS´97 - Probabilistic Methods Applied to Power Systems*, pp. 151-157, Sep. 21-25 1997, Vancouver, Canada.

[16] Pereira, J. T., Miranda V. Saraiva, J., "A Comprehensive State Estimation Approach for EMS/DMS Applications", IEEE Power Tech '99 Conference, Budapest, Hungary, Aug 29 Sept 2, 1999.

[17] Pereira, J., Miranda, V., Saraiva, J. T., "Fuzzy Control of State Estimation Robustness", Proc. of PSCC'02 - 14th Power Systems Computation Conference, Session 37, Paper 5, Sevilla, Spain, June 2002.

[18] Pereira, J. *A State Estimation Approach for Distribution Networks Considering Uncertainties and Switching*, PhD Thesis, FEUP, Porto, July 2001.

[19] Pereira, J., Saraiva, J.T., Miranda V., Simões Costa, A., Lourenço, E. M., Clements, A. K. "Comparison of Approaches to Identify Topology Errors in the Scope of State Estimation Studies", Porto Power Tech Conference IEEE 2001, September, 2001 Porto, Portugal.

[20] Pereira, J. T., Miranda V., "An Integrated Load Allocation/State Estimation Approach for Distribution Networks". 8th International Conference on Probabilistic Methods Applied to Power Systems, Iowa State University, Ames, Iowa, September 12-16, 2004.

[21] Pereira, J., Miranda, V., Saraiva, J. T., "Fuzzy Control of State Estimation Robustness", Proc. of PSCC'02 - 14th Power Systems Computation Conference, Session 37, Paper 5, Sevilla, Spain, June 2002.

[22] Simões Costa A., R. C. Pires, L. Mili, "Iteratively Reweighted Least-Squares State Estimation through Givens Rotations", IEEE Trans. PWRS, Vol. 14, No. 4, pp. 1499-1507, Nov. 1999.

[23] Simões Costa, A., R. C. Pires, L. Mili, "Iteratively Reweighted Least-Squares State Estimation through Givens Rotations", IEEE Trans.PWRS, Vol. 14, No. 4, pp. 1499-1507, Nov. 1999.

[24] Subrahmanian, V.S., "On the semantics of quantitative logic programs" *Proc. 4th. IEEE Symposium on Logic Programming, Computer Society Press*, Washington D.C, 1987.

[25] Takagi,T., M. Sugeno, "Fuzzy Identification of Systems and Its Application to Modeling and Control", IEEE Trans. on Systems, Man and Cybernetics, Vol. 15, pp. 116-132, Jan 1985.

[26] Zadeh. L. A. "Fuzzy Sets". *Information and Control*, pp. 338 -353, August 1965.

VII. BIOGRAPHIES

João Inácio da Silva Filho was born in São Paulo, Brazil, on July 04, 1953. He received the PhD in Electric Engineering from the Polytechnic School of São Paulo University POLI/USP in the area of Digital Systems, and the master's degree in Microelectronic for the same Institution. He is member of IEEE and the Coordinator of the Paraconsistent Applied Logic Group – GLPA of the Santa Cecilia University and member of the Group of Logic and Theory of the Science of IEA Institute of Advanced Studies of São Paulo University.

Jorge Pereira received the B.S. degree in applied mathematics from the Faculdade de Ciências da Univ. Porto, Portugal, in 1991, and the M.Sc. and Ph.D. degrees in electrical and computer engineering from the Faculdade de Engenharia da Univ. Porto, in 1995 and 2002, respectively. In 1991, he joined INESC Porto, a private research institute, where he is the Research Manager. Since 1995, he has been with the Faculdade de Economia da Univ. Porto, and currently he is an Assistant Professor. He has collaborated on several projects related to the development of DMS systems, the application of soft computing techniques to power systems, namely, to the state estimation problem.

Alexandre Rocco was born in São Paulo, Brazil on 1954. He received the PhD in Electric Engineering from the Polytechnic School of São Paulo University POLI/USP in the Electrical Power System area, and the master's degree in Electrical Power Automation at University of Campinas UNICAMP. He is member of IEEE and the Paraconsistent Applied Logic Group – GLPA and Electrical Engineer Coordinator of Santa Cecilia University.

Maurício Conceição Mário was born in Santos, Brazil on July 31, 1965. He received the master's degree in Electric Engineering by the Universidade Federal of Uberlândia – UFO, Minas Gerais, Brazil in the Information Systems area. He is a member of the Paraconsistent Applied Logic Group – GLPA and was developed a system of signals recognition based on PANN -Paraconsistent Artificial Neural Network and was is devoted the researches about applications of the Paraconsistent Logic in medical measure equipments.

Elias Freire de Azeredo is graduate in Electric Engineering for Federal University Espírito Santo -UFES in Brazil (1989) and is the Coordinator of the Division of Engineering of the Sub transmission of the EDP ESCELSA company in Brazil. Has experience in the area of Electric Engineering, with emphasis in Electric Power Systems.

Vitor Luiz Guitte Gardiman is graduate in Electric Engineering for University Sorocaba Brazil (1982) and now it exercises manager's position of the Division of Engineering of the Sub transmission of the EDP Bandeirante company in Brazil. Has experience in the area of Electric Engineering, with emphasis in Electric Power Systems.