SHORT TERM USE OF THE SYSTEM TARIFFS - THE SUBSTITUTION METHOD REVISITED

Paulo M. De Oliveira-De Jesus
Faculty of Engineering of Porto University
INESC Porto
pdeoliv@fe.up.pt

Maria T. Ponce de Leão
Faculty of Engineering of Porto University
INESC Porto
mleao@fe.up.pt

ABSTRACT
The substitution method is a simply procedure widely applied for loss pricing in real distribution systems with distributed generation. Some drawbacks have been pointed out about the consistency and appropriateness of this method and new and more complex procedures based upon cost-causality approach have been introduced in the literature. In this work, the substitution method is revisited and reformulated including a new performance index with the aim of produce an equitable sharing of the benefits or added costs introduced by distributed generators. Under certain assumptions, the proposal can emulate the solution provided by a marginal or incremental approach fulfilling some requirements for an effective loss allocation policy as facility to understand and apply, ensure recovery of losses and send out economical signals to agents. This proposal represents an practical alternative for access pricing in distribution networks with high penetration of distributed generation.

KEY WORDS
Loss allocation, substitution method, marginal, loss pricing, access pricing

1 Introduction

Some countries as England and Wales have applied a substitution method to evaluate network losses in order to apply Use of the System Tariffs against generators (GUoS) and loads (DUoS) [1]. In accordance with this method, the impact of a network user on the system losses is assessed by calculating the difference in losses when the user is connected and when it is disconnected from the network. This practice is inspired in the avoided cost theory and its application requires a with-without test in order to achieve the benefits or additional costs introduced by a new agent connected at given location of the network. This avoided cost practice began in 1978 when the Public Utility Regulatory Policy Act was passed in the United States.

The substitution method is simply of understand and implement. However, some authors, as [2], have point out a number of problems associated with this method. When all users (consumers and loads) are included in the analysis, there exist conditions where the method produces inconsistent results.

A small example is provided demonstrating how all agents must be rewarded by their contribution on loss reduction and no user is responsible for the actual losses.

Recently, a modified and simplified substitution method [3] has been proposed introducing only two steps. In the first one, the losses are computed in absence on distributed generators (all producers must be disconnected). In the second one, losses are computed in presence of distributed generation (all producers must be connected). The 100% of losses disregarding the effect of DG are distributed among loads using a tracing based method. The difference between losses when the generators are disconnected and when they are connected is defined as avoided losses and reallocated among generators using once again a tracing based method. If these avoided losses are positive, generators must be rewarded by their contribution on loss reduction. On the contrary, if the difference is negative generators have to pay due to additional losses.

This approach overcomes some of the deficiencies of the original substitution method. The recovery of the cost of losses is guaranteed because all loads are always charged and generators could receive an incentive or penalization charge owing to their effect on the network losses. The application of a tracing method to allocate losses among loads in the first step and generators in the second step is secondary and it can be substituted by another method, i.e. pro rata, MW-mile, etc. depending on the acceptance or not of a given degree of cross-subsidization among users. Nevertheless, a basic drawback remains unsolved. The potential benefits introduced by DGs connection are not reverted to consumers. Loads always pays the entire losses despite the presence of DGs.

In this paper, the substitution method proposed in [3] is modified in order to overcome this deficiency. A performance index η is included with the aim of produce an equitable sharing of the benefits or added costs introduced by DG. This index is chosen and specified by the regulatory board going from 0 to 1 indicating the sharing proportion of avoided losses. There exists a specific performance index η^* where the sharing proportion among loads and generators emulate the results of the marginal approach discussed in [4]. The application of a substitution method that emulates the solution provided by a marginal approach can fulfill the requirements of an effective loss allocation: easy to understand and apply, recovery of losses and send out

economical signals to agents. This proposal represents an practical alternative to address the loss pricing problem in distribution networks with high penetration of distributed generation.

2 The Substitution Method Revisited

Most of the prevailing methods for avoided T&D cost assessment appear to be based on the value of capital deferrals when a given agent is connected to an network. Some avoided cost practices are based upon a substitution method. Essentially the idea behind this method is what happens with the network cost when a given user is connected or disconnected at given location. The method could be used to assess the avoided fixed or variable costs of the electricity networks owned by a utility regulated as natural monopoly.

Concerning avoided power losses, the substitution method has been applied in England and Wales to large customers and DGs in order to obtain Loss Adjustment Factors [1]. The implications of the substitution method has been extensively analyzed in [2]. Several problems are associated with this practice, among which the following two are major sources of concern: the method can produce inconsistent results and the method do not prevent temporal and spatial cross-subsidies between generators and loads. In [3], the substitution method is simplified with the intend of overcome these inconsistencies. These facts can be numerically illustrated using the simple network provided[1] by [2] and depicted in Figure 1

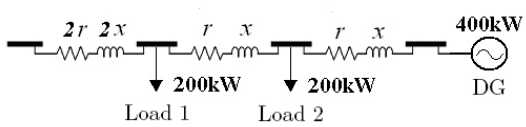

Figure 1. Numerical example

In the original substitution method [2], losses are computed in four steps:

Step 1: All users connected= $(400^2 + 200^2) \cdot 0.00001$ = 2kW

Step 2: DG out= $400^2 \cdot 0.00002 + 200^2 \cdot 0.00001$ = 3.6kW

Step 3: Load 1 out = $200^2 \cdot 0.00002 + (200^2 + 400^2) \cdot 0.00001$ = 2.8kW

Step 4: Load 2 out= $200^2 \cdot 0.00002 + (400^2 + 400^2) \cdot 0.00001$ = 4.0kW

The connection of loads at nodes 1 and 2, and a DG at node 3 produces a loss reduction of 0.8kW, 2.0kW and 1.6kW, respectively. As a consequence, all agents should be rewarded. The inconsistency seems to arise from the fact that the cost of power losses are not absolutely recovered because there are no agents responsible for produced losses.

In the proposal [3], losses are computed in two steps:

Step 1: All DGs and loads connected= $(400^2 + 200^2) \cdot 0.00001$ = 2kW

Step 2: All DGs disconnected = $400^2 \cdot 0.00002 + 200^2 \cdot 0.00001$ = 3.6kW

Loads are charged with 3.6kW and generators rewarded with 1.6kW. This modified substitution method overcomes some of the deficiencies of the original substitution method. The recovery of the cost of losses is guaranteed because loads are always charged and generators receive a specific incentive or penalization charge owing to its effect on the network losses.

In this proposal, the key idea held is the introduction of a multiplying factor η over the avoided losses in order to share the benefits losses between loads and generators. For instance, in the small example if $\eta = 0$, generators do not receive any compensation and 100% of the benefits are reverted to loads via a reduction on the short term use of the system tariff. On the contrary, if $\eta = 1$ generators receive 100% of the benefits as incentive as originally proposed by the authors. In the illustrative example, if $\eta = 0.5$, loads have to pay 2.8kW and generators receive 0.8kW. This means that DGs have incentives to reduce losses and loads charges are reduced due to the avoided costs introduced by DGs. Regulatory board should specify an appropriate sharing factor. In next paragraphs, it is derived a η^* factor that emulates the solution provided by a marginal approach.

3 Power Losses Pricing Framework

The general framework developed for loss pricing is presented is based upon the computation of Short Term Use of the System (UoS) tariffs. Figure 2 shows meshed and radial distribution systems connected to a transmission system. At given hour h, an energy price λ^h is provided either by a market mechanism or fixed by regulatory board.

At distribution level, loss allocation is performed through two type of UoS tariffs. The first one, a Generation Use of the System $GUoS^h$ tariff is applied to metered distributed generators. They could be connected at distribution level either on meshed High Voltage (HV) networks or connected at radial Medium Voltage (MV) networks. The second one, a Demand Use of the System $DUoS^h$ tariff is applied to all metered consumers connected to the network. At given voltage level this price is uniform, it does not depend on geographic localization. The computation of DUoS and GUoS are made as *ex-post* procedure from available data of DMS/SCADA support. In this paper, the effects of distributed generation at medium voltage level on Transmission Use of the System tariffs ($TUoS^h$) are not considered.

The basic idea is to apply GUoS tariffs against to generators in order to remunerate system losses and its value might be positive or negative. For instance, a negative

[1] The network has a radial feeder to which three agents are connected: two loads and a DG. All voltage magnitudes are equal to 1.0 pu. Voltage drops are negligible. Losses have no impact on the calculation of power flows. Reactance is much greater than resistance. Losses computation reduces to a simple product of line resistance and the square of the power flow through the line. Power base value is 1OOkW and the resistance r is 0.001pu.

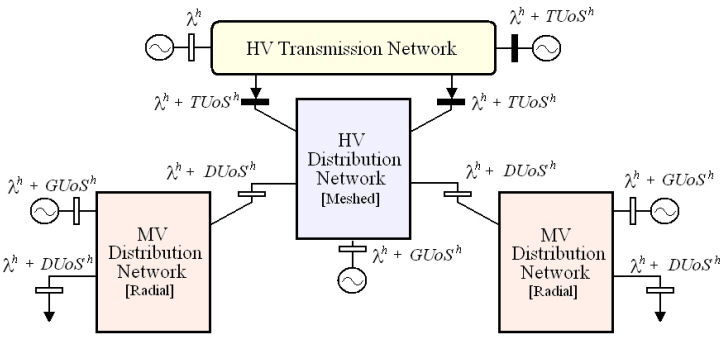

Figure 2. Tariffs of Use of the System

$GUoS^h$ implies a locational price $\lambda^h + GUoS^h_{Gk}$ lower than the energy price λ^h at given hour h. In this case, generators are charged owing to its contribution on increase of power losses. On the other hand, loads are not charged with a nodal price. A uniform access price $DUoS^h$ is applied instead of. Generally, a positive $DUoS^h$ implies a uniform price $\lambda^h + DUoS^h$ higher than the energy price λ^h . In this case, loads are charged owing to its contribution on increase of power losses.

4 Proposed methodology

The proposed avoided cost access-price framework is shown in the Figure 3. Loads are charged with a *Uniform Load Price* (ULP^h_D) and generators are charged with an *Avoided Loss Price* (ALP^h_G). These prices are constituted by two terms: the first one corresponds to an hourly energy price[2] λ^h and the second one is the Use of the System tariff. In this case, it is employed the additive approach for revenue reconciliation of losses.

Two type of tariffs are specified. Firstly, the Demand Use of the System (DUoS) tariff depends on the hourly energy λ^h and the avoided loss factor ALF^h_D associated to all demand buses. Secondly, the Generation Use of the System (GUoS) tariffs depend on the hourly energy price λ^h and the avoided loss factor ALF^h_G associated to all generating buses.

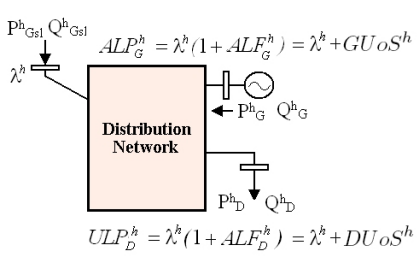

Figure 3. Avoided UoS tariffs

[2]The hourly energy price can be obtained directly from a liberalized electricity market or fixed by a regulatory board

4.1 With-Without Test

In order to compute ALF^h_D and ALF^h_G, two power flows must be performed. The state of the system is given by $\boldsymbol{V^h}$ and $\boldsymbol{\theta^h}$ when DG is connected and $\boldsymbol{V'^h}$ and $\boldsymbol{\theta'^h}$ when DG is not connected to the grid. Losses are computed directly from the state of the system as follows:

$$L^h = \frac{1}{2}\sum_{i=1}^{n}\sum_{k=1}^{n} G_{ik}[(V_i'^h)^2 + (V_k'^h)^2 - 2V_i'^h V_k'^h \cos(\theta'^h_{ik}] \quad (1)$$

$$L^h_{DG} = \frac{1}{2}\sum_{i=1}^{n}\sum_{k=1}^{n} G_{ik}[(V_i^h)^2 + (V_k^h)^2 - 2V_i^h V_k^h \cos(\theta^h_{ik}] \quad (2)$$

The avoided losses are expressed as:

$$A^h = L^h - L^h_{DG} \quad (3)$$

The ALF factors are computed depending on A^h polarity.

$$ALF^h_G = \begin{cases} \frac{\eta^h A^h}{\sum_{k=1}^{n} P^h_{Gk}}; 0 \le \eta^h \le 1; A^h \ge 0 \\ \frac{A^h}{\sum_{k=1}^{n} P^h_{Gk}}; A^h < 0 \end{cases} \quad (4)$$

$$ALF^h_D = \begin{cases} \frac{L^h}{P^h_D} - (1-\eta^h)\frac{A^h}{P^h_D}; 0 \le \eta^h \le 1; A^h \ge 0 \\ \frac{L^h}{P^h_D}; A^h < 0 \end{cases} \quad (5)$$

If $A^h > 0$, avoided losses are proportionally shared between loads and consumers using a sharing index η that goes from 0 to 1. If $A^h < 0$, avoided losses are negative and generators are charged owing to additional losses of the network.

Assuming that positive avoided losses are achieved, there exists a value η^{*h} that that $ULP^h = UIP^h$ where UIP^h is a *uniform incremental price* applied to loads [4]. This value can be assessed directly through the following formula:

$$\eta^{*h} = 1 + \frac{-ILF^h_u \cdot k^h_0 \cdot P^h_D - L^h}{L^h - L^h_{DG}} \quad (6)$$

where ILF^h_u is a uniform incremental factor and k_0 is a reconciliation factor. Uniform loss pricing approach is included in the appendix. Additional details can be found in [4]

Finally, Use of the System tariffs and prices applied against generators and loads are given by:

$$GUoS^h = \lambda^h \cdot ALF^h_G \quad (7)$$
$$DUoS^h = \lambda^h \cdot ALF^h_D \quad (8)$$
$$ALP^h_G = \lambda^h + GUoS^h \quad (9)$$
$$ULP^h_D = \lambda^h + DUoS^h \quad (10)$$

4.2 Losses and Revenues Allocated

Power losses allocated to each generator k and load demands at given hour h are computed as follows

$$L_{Gk}^h = ALF_G^h \cdot P_{Gk}^h \quad k = 1, \ldots, n \tag{11}$$

$$L_D^h = ALF_D^h \cdot P_D^h \tag{12}$$

Loss revenues due to power loss allocation policy assigned to each generator k and load demands at given hour h are computed as follows:

$$R_{Gk}^h = GUoS^h \cdot P_{Gk}^h \quad k = 1, \ldots, n \tag{13}$$

$$R_D^h = -DUoS^h \cdot P_D^h \tag{14}$$

A positive revenue for generators R_{Gk}^h implies an incentive for loss reduction. In general, loads have negative loss revenues and therefore they must be charged by network losses,

5 Illustrative Example

The proposed methodology is applied for illustration purposes in a simple three-bus test system as shown in Figure 4. Bus 1 corresponds to grid supply point (GSP) where the distribution system connects to the transmission system. A 5MW-rated wind generator is connected to bus 2. Load demands connected to bus 2 and 3 have 2MW and 3.5MW, respectively. Line data is given in per unit considering $S_{\text{BASE}} = 10\text{MVA}$ and $V_{\text{BASE}} = 10\text{kV}$. The system price is λ^h=10€/MWh.

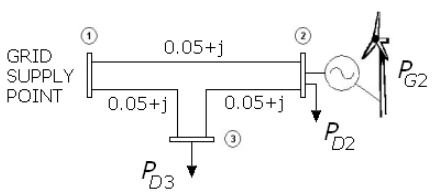

Figure 4. Three bus test system

The components of Y_{BUS} are G_{11} = G_{22}= G_{33} = 0.0998pu B_{11} = B_{22} = B_{33} = - 1.9950pu, G_{12} = G_{23} = G_{13} = - 0.0499pu, B_{12} = B_{23} = B_{13} = 0.9975pu.

The state of the system when DG at bus 2 is disconnected is $\boldsymbol{V'^h}$ = [1.0000 0.9437 0.9354] and $\boldsymbol{\theta'^h}$ = [0 -0.2687 -0.3260]. Power losses are L = 88.04kW.

The state of the system when DG at bus 2 is connected is assessed using different voltage values modelling bus 2 as PV. As seen in Table 1, the minimal losses $L_{DG} = 37.58kW$ are achieved when $V_2 = 1.017$. The avoided losses goes from 39.71kW@0.9pu to 45.13kW@1.1pu.

For η=1, the solution corresponds to the methodology presented in [3]. As shown in Table 2, note that ALF_G^h factors are positive, then the generator 2 is always rewarded by loss reduction. Loads always pays the entire losses (88.05kW) disregarding the impact of DGs. The DUoS tariff does not vary (loads pays 0.16€/MWh) and the GUoS tariff is maximum (DGs receive 0.20€/MWh) for minimum system losses (37.58kW).

		V_2 [pu]				
		0.90	0.96	**1.017**	1.06	1.10
L_{DG}	kW	48.34	40.28	**37.58**	38.80	42.92
L	kW	88.05	88.05	**88.05**	88.05	88.05
A	kW	39.71	47.77	**50.47**	49.25	45.13

Table 1. Avoided losses when V_2 goes from 0.9pu to 1.1pu

		V_2 [pu]				
		0.90	0.96	**1.017**	1.06	1.10
ALF_G	-	0.015	0.019	**0.020**	0.020	0.018
ALF_D	-	0.016	0.016	**0.016**	0.016	0.016
L_{G2}	kW	39.71	47.77	**50.4**	49.25	45.13
L_D	kW	88.05	88.05	**88.05**	88.05	88.05
ALP_G	€/MWh	10.16	10.19	**10.20**	10.19	10.18
ULP_D	€/MWh	10.16	10.16	**10.16**	10.16	10.16
$GUoS$	€/MWh	0.16	0.19	**0.20**	0.19	0.18
$DUoS$	€/MWh	0.16	0.16	**0.16**	0.16	0.16
R_{G2}	€/h	0.397	0.478	**0.505**	0.49	0.45
R_D	€/h	-0.88	-0.88	**-0.88**	-0.88	-0.88

Table 2. Losses allocated and economic results

Figure 5 shows final prices applied to loads and generators, when the sharing factor varies from 0 to 1 and voltage at bus 2 varies from 0.9pu to 1.1pu.

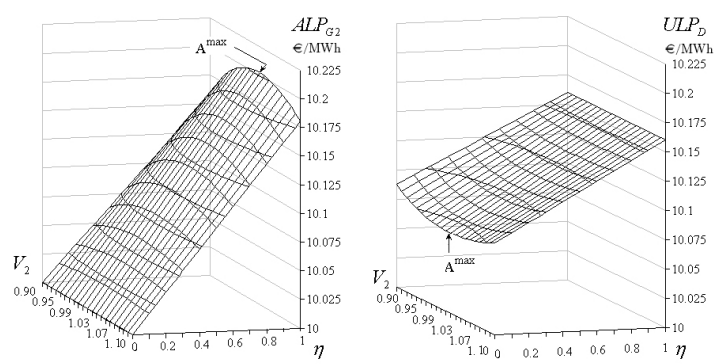

Figure 5. Prices applied to generators and loads as function of V_2 and η

Note that maximum prices at generating buses and minimum prices at demand buses are achieved at minimum power losses operating point. If marginal approach is applied [4], the uniform marginal price UIP^h applied to loads is 10.0182€/MWh. Then, applying equation 6, η^{h*}=0.212 at minimal losses operating point, where $k_o^h = 0.4822$, $ILF_u^h = -0.0182$, $P_D^h = 5500kW$, $L^h = 88.05kW$ and $L_{DG}^h = 37.58kW$. In this case, the DUoS tariff is 0.12€/MWh (loads pay) and the GUoS tariff is 0.04€/MWh (DGs receive).

This result is meaningful because in the emulated marginal solution, loads do not pay the 100% of the power losses, receiving almost 79% of the benefits. On the other hand, generators receive an incentive around 21% of the benefits. In further analysis, research effort must be oriented in characterize these sharing indexes in large-scale distribution networks.

6 Conclusion

In this work, the substitution method is reformulated including a new performance index with the aim of produce an equitable sharing of the benefits or added costs introduced by distributed generators. Under certain assumptions, the proposal can emulate the solution provided by a marginal or incremental approach fulfilling the requirements of an effective loss allocation: easy to understand and apply, recovery of losses and send out economical signals to agents. This proposal represents an practical alternative for access pricing in large distribution networks with high penetration of distributed generation.

7 Acknowledgement

This work was supported by the Portuguese National Science & Technology Foundation FCT-SFRH/BD8410-2002 and Value of Non-Utility Sources Project VENUS/POCTI/ESE-47883/2002.

8 References

[1] OFGEM, *Distributed generation: price controls, incentives and connection charging. Further discussion, recommendations and future action.*,United Kingdom, 2002.
[2] Mutale, J.,Strbac, G.,Curcic, S. and Jenkins, N. (2000). Allocation of losses in distribution systems with embedded generation. *IEE Proceedings: Generation, Transmission and Distribution*, 147(1):714.
[3] Costa, P. M. and Matos, M. A. (2004). Loss Allocation in Distribution Networks With Embedded Generation. *IEEE Transactions on Power Systems*, 19(1):384389.
[4] De Oliveira De Jesus, P. M. and Ponce de Leão, M. T. (2006). Integrated framework for energy loss allocation in electric distribution systems under liberalised energy markets. *International Journal of Global Energy Issues Special Issue on Policy and Economic Issues of Electrical Power and Energy Systems*, to be published.
[5] De Oliveira-De Jesus, P. M. ,Yusta, J. M.,Khodr, H. M.,Urdaneta, A. J. and Ponce de Leão, M. T. (2005). Uniform marginal pricing for the remuneration of distribution networks. *IEEE Transactions on Power Systems*, 20(3):13021310.

9 Appendix - Uniform Marginal Pricing

In [5] is proposed a distribution pricing framework based on uniform and time varying marginal prices.

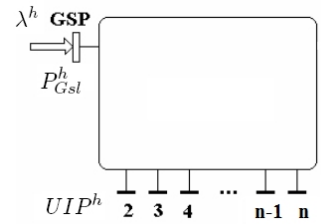

Figure 6. Uniform marginal pricing

Considering a distribution network without distributed generation, as shown in Figure 6 the proposal consists on the computation of a hourly uniform incremental price (UIP^h) by solving the social welfare optimization problem expressed as the maximization of global consumer benefit minus all consumer expenses:

$$SW = \sum_{k=1}^{n} \int UIP^h \cdot \mathrm{d}P^h_{Dk} - \lambda^h \cdot P^h_{Gsl} \tag{15}$$

subject to (16)

Demand side response (17)

Nodal Power Balance (18)

Capacity Constraints (19)

The decomposition of the hourly marginal price UIP^h applied to an end-user can be described as the sum of marginal cost of energy and the tariff of use of the distribution network.

$$UIP^h = \lambda^h + DUoS^h \tag{20}$$

$$DUoS^h = \lambda^h \cdot \frac{\mathrm{d}L^h}{\mathrm{d}P^h_D} + \mu^h \tag{21}$$

The difference of nodal marginal approach with regard to the uniform scheme stays in the fact that marginal losses component dL^h/dP^h_D and congestion factors μ^h do not depend of spatial distribution of load and additional charges obtained are paid throughout all consumers. Considering no congestion in distribution lines, the UIP^h can be written as function of lagrange multipliers ν^h_k correspondent to power balance equation 18 as follows:

$$UIP^h = \frac{\sum_{k=1}^{n} \nu^h_k \cdot P^h_{Dk}}{\sum_{k=1}^{n} P^h_{Dk}} \tag{22}$$

Then, as the lagrange multipliers are a function of the incremental factors $\nu^h_k = \lambda^h + \lambda^h \cdot \frac{\mathrm{d}L^h}{\mathrm{d}P^h_{Dk}}$, the uniform incremental loss factor can be obtained as function of nodal ILFs obtained directly using the chain rule [2] by means of the general formula:

$$ILF^h_u = \frac{\sum_{k=1}^{n} ILF^h_k \cdot P^h_{Dk}}{\sum_{k=1}^{n} P^h_{Dk}} \tag{23}$$

The uniform incremental factor ILF^h_u must be computed at given voltage level and applied only against load buses.

The Ninth IASTED International Conference on

POWER AND ENERGY SYSTEMS
~ PES 2007 ~

January 3 – 5, 2007
Clearwater, Florida, USA

REGISTRATION FEES

Click here to go directly to conference registration forms

REISTRATION FEES

	Student (with valid Student ID)	IASTED Member	IASTED Non-Member
Author Registration (CD Proceedings Included)	$600	$600	$670
Author Registration (Book Proceedings Included)	$630	$630	$700
Non-Author Attendee Registration	$200**	$600	$670

Note: If you register from November 25 - December 2, 2006, late registration fees will apply. See the registration forms for the late registration fees.

The registration fee includes:

- **One Copy of the Conference Proceedings**
- **Dinner Banquet (and Entertainment) on January 4, 2007**
- **Morning and afternoon coffee breaks**
- All **Keynote Addresses**, **Tutorial Sessions**, and **Special Sessions** offered during the conference

* The Non-Author Attendee registration deadline is **November 27, 2006**. Delegates who would like to register as attendees after this date must do so **onsite** at the conference.
**The student attendee rate does NOT include a copy of the proceedings, however it does include the dinner banquet.
*** The one day attendee registration fee includes all tutorials, keynotes, and paper sessions that are scheduled on your day of choice. It does not include a copy of the proceedings or the dinner banquet.

AUTHORS – Please note the following:
In order for a paper to be published, the following requirements must be met:

(1) The paper must be **registered** and **fully paid** for.
(2) The paper must be **presented** by one of the authors at the conference.
(3) The final paper must be **correctly formatted** and submitted via email to finalpapers@iasted.org. Formatting instructions can be found here.
(4) Deadline for registration and full payment is **November 24, 2006**. Deadline for final paper submission is **November 15, 2006.** If you do not pay the registration fee by the deadline, you will be required to pay the late registration fee. No registrations will be accepted after **December 2, 2006**. If you do not submit your registration and full payment by this date your paper will not be published in **any** IASTED conference Proceedings.
(5) Complete the Copyright Form and fax it to IASTED at 1-403-247-6851.

Only one paper of up to 6 pages is included in the regular registration fee. The additional paper and page charge is **US$80** per page. An author with more than one paper pays the additional paper(s) rates unless a co-author has also registered and paid the full registration fee. A copy of the student ID is required to register with the student rate.

ATTENDANCE IS MANDATORY TO RECEIVE THE PROCEEDINGS:
You must attend the conference and present your paper if you want to receive a copy of the Proceedings.

Cancellation/Refund Policy:
Please note that in the event you choose to withdraw, a non-refundable handling charge of **US $150** will be deducted prior to issuing the refund. Refunds will only be issued until the registration deadline of **November 24, 2006**. Also, absent registrants will be charged the full conference fee, but substitutions may be made at any time.

Acknowledgements:
Your registration and payment will be acknowledged electronically with confirmation of your payment according to your registration form. Your registration will not be considered complete without full payment. If you do not receive confirmation please contact the Conference Manager.

Conference Registration forms can be found by clicking the following links:

I am an author/coauthor of a paper that will be presented at this conference

I am an attendee of this conference

For more information and to register please contact IASTED by e-mail (calgary@iasted.org) or phone (403 288-1195).

Back to the PES 2007 Home Page

Usuarios
Tus reservas
Entrar
Ayuda

eDreams

Home | Vuelos | Hoteles | Viajes | Coches | Área Empresas | Turismo Rural | Destinos | Paradores

Buscar ▸ **Seleccionar Vuelos** ▸ Confirmar Selección ▸ Compra ▸ Confirmación

Por favor selecciona tus vuelos

¿Necesitas Ayuda?

Has buscado:

Desde	A	Ida	Vuelta	Adultos	Bebés	Niños	Clase	Aerolínea
Oporto	Miami	2 enero	5 enero	1	0	0	Turista	

Vuelos encontrados 1 - 11 de 50 Páginas 1 2 3 4 5 Siguiente

Mostrar resultados:

Resultados ordenados por: ○ Precio ○ Hora de salida IDA ○ Hora de salida VUELTA

Precio por persona i/v (Tasas incluidas) *= 1.643,89 €
Desglose

Pasajeros = 1

IDA 02/01/2007

Origen / Destino	Salida / País Llegada	Cia aérea / Escalas
Oporto (Porto) / Miami (Miami Inte...	○ 20:25 / Estados Unidos 15:05 (+ 1 día)	American Airlines / 1

VUELTA 05/01/2007

Miami (Miami Inte... / Oporto (Porto)	○ 18:05 / Portugal	

Modificar Búsqueda

Ciudad de salida: OPO
Ciudad de destino: MIA
Fecha de salida: (dd/mm/yyyy) 02/01/2007
Hora: Lo + barato
Fecha de regreso: (dd/mm/yyyy) 05/01/2007
hora: Lo + barato
○ Ida y vuelta
○ Sólo ida
Adultos: 1
Niños: 0
Bebes: 0
☐ Sólo vuelos directos
☐ Sólo Aeropuertos Principales
Buscar